Kemper 490 PRO

SPARE PARTS CATALOGUE

Kemper 490 PRO
137377 September-2025 English

You can find current spare parts information at: parts1.kemper-stadtlohn.de

Kemper
Printed in Germany(Revised)
COPYRIGHT © 2025
All rights reserved

Remarks and Abbreviations

The following remarks and abbreviations may appear throughout this parts catalog. Refer to the following table for translations.

Codes used in "Remarks" column	English
APPL	This application only
AR	As required
ASSY	Complete assembly
CAT	Category
CNLA	Complete no longer available (order individual parts)
CTL	Cut To Length
FI	Field installation kit
FOR	Use with
FRONT	Front
ID	Inside diameter
INCL KEYS	Including keys
KIT	Kit
L	Number of links
LGTH	Length
LH	Left- hand
LOW	Lower
MARKED	Marked
MF	Make from
NA	Not applicable
NSEP	Not supplied separately
OD	Outside diameter
OR	Or
ORD	Order
ORD W/	Also order
PACKG	Packet of
RATIO	Ratio
REAR	Rear
RH	Right- hand
SUB	Replaced by
SUB FOR	Substitutes for
TK	Thickness
UP	Upper
W/O	Without
Z	Gear and sprocket teeth number

RIGHT-HAND AND LEFT-HAND sides are determined by facing the direction the implement will travel when going forward.

Table of contents

5
ATTACHING FRAME (KE000591) 7
ATTACHING FRAME (KE000592) 9
POINTER STANDARD (KM001788) 12
POINTER FOR SUPPORT WHEEL (KM001848) 14
Attachments for Comfort Wheel (KE000586) 16
ATTACHING FRAME (KE000904) 19
ATTACHING FRAME (KE000903) 21
ATTACHING FRAME (KE000905) 24
Attachments for Comfort Wheel (KE000906) 26
ELECTRIC FOR COMFORT WHEEL (KM001838) 29
INTAKE PLATE (KE000907) 31
ADAPTER KIT (KE000580) 33
Support legs (KM000401) 35
DRIVES (KE000873) 37
DRIVES (KE000885) 39
BRACKET (KE000886) 41
BRACKET (KE000887) 43
UCC-Box for speed sensor (KE000876) 45
FEEDING DRUMS (KM002397) 47
BLADE ROTORS (KM002458) 49
Separator tips – sliding shoes (KM002379) 51
Rear wall (KM002390) 53
STRIPPER (KM002385) 55
Centre table (KM002398) 57
SEPERATOR TIPS (KM002393) 59
COVERS (KM002386) 61
BOTTOM (KM002375) 63
DRUM (KM002391) 65
Wiper – conveyor drums (KM002392) 67
Protective shield (KM002737) 69
Accident Protection (KE000865) 72
Transverse transport drum (KM002389) 75
FEED BAR (KM002346) 77
FULCRUM (KM001795) 79
CROP LIFTER (KM002231) 81
HYDRAULIC LIFT COMPONENTS (KE000618) 83
HYDRAULIC LIFT COMPONENTS (KM002628) 85
HYDRAULIC LIFT COMPONENTS (KM002627) 87
Hydraulic lifting device (KM002280) 89
BASE FRAME (KM002396) 91
BASE FRAME (KM608009) 93
BASE FRAME (KM002664) 95
GEARBOX OVERVIEW (KM002258) 98
Drive shaft (KM001771) 100
Drive shaft for launch clutches (KM000001) 102
Friction clutch – water cooled (KM000007) 104
SPUR GEAR FOR FEEDING DRUM (KM002635) 106
SPUR GEAR FOR FEEDING DRUM (KM002701) 108
SPUR GEAR FOR FEEDING DRUM (KM002637) 110
TRANSMISSION (KM002016) 112
TRANSMISSION (KM001870) 115
Helical spur gear LCA122200 (KM000655) 117
Helical spur gear LCA122200/01 (KM000184) 120
TRANSMISSION LCA122201 (KM001871) 122
Helical spur gear LCA122201 (KM000656) 124
Helical spur gear LCA122200/01 (KM000184) 127
Right-angle gear for transverse transport drum (KM002745) 129
Right-angle gear CLAAS Multispeed (KE000577) 131
Gearbox CLAAS Multispeed (KE000499) 133
MAIN WIRING HARNESS (KE000868) 136
SENSOR (KE000582) 138
SENSOR (KE000583) 140
WIRING HARNESS SPFH (KE000620) 142
LABELS (KE000902) 144
STEERING SYSTEM (KE000870) 146
AUTOMATIC HEADER CONTROL (AHC) (KE000589) 149

Table of contents

AUTOMATIC HEADER CONTROL (AHC) (KM002545) 152
Special equipment (KM001592) 155
Stalk Lifters For Down-Crop - Outer and Middle (KE000963) 157

Article no.	Description
KE000591	ATTACHING FRAME
KE000592	ATTACHING FRAME
KM001788	POINTER STANDARD
KM001848	POINTER FOR SUPPORT WHEEL
KE000586	Attachments for Comfort Wheel
KE000904	ATTACHING FRAME
KE000903	ATTACHING FRAME
KE000905	ATTACHING FRAME
KE000906	Attachments for Comfort Wheel
KM001838	ELECTRIC FOR COMFORT WHEEL
KE000907	INTAKE PLATE
KE000580	ADAPTER KIT
KM000401	Support legs
KE000873	DRIVES
KE000885	DRIVES
KE000886	BRACKET
KE000887	BRACKET
KE000876	UCC-Box for speed sensor
KM002397	FEEDING DRUMS
KM002458	BLADE ROTORS
KM002379	Separator tips – sliding shoes
KM002390	Rear wall
KM002385	STRIPPER
KM002398	Centre table
KM002393	SEPERATOR TIPS
KM002386	COVERS
KM002375	BOTTOM
KM002391	DRUM
KM002392	Wiper – conveyor drums
KM002737	Protective shield
KE000865	Accident Protection
KM002389	Transverse transport drum
KM002346	FEED BAR
KM001795	FULCRUM
KM002231	CROP LIFTER
KE000618	HYDRAULIC LIFT COMPONENTS

Article no.	Description
KM002628	HYDRAULIC LIFT COMPONENTS
KM002627	HYDRAULIC LIFT COMPONENTS
KM002280	Hydraulic lifting device
KM002396	BASE FRAME
KM608009	BASE FRAME
KM002664	BASE FRAME
KM002258	GEARBOX OVERVIEW
KM001771	Drive shaft
KM000001	Drive shaft for launch clutches
KM000007	Friction clutch – water cooled
KM002635	SPUR GEAR FOR FEEDING DRUM
KM002701	SPUR GEAR FOR FEEDING DRUM
KM002637	SPUR GEAR FOR FEEDING DRUM
KM002016	TRANSMISSION
KM001870	TRANSMISSION
KM000655	Helical spur gear LCA122200
KM000184	Helical spur gear LCA122200/01
KM001871	TRANSMISSION LCA122201
KM000656	Helical spur gear LCA122201
KM000184	Helical spur gear LCA122200/01
KM002745	Right-angle gear for transverse transport drum
KE000577	Right-angle gear CLAAS Multispeed
KE000499	Gearbox CLAAS Multispeed
KE000868	MAIN WIRING HARNESS
KE000582	SENSOR
KE000583	SENSOR
KE000620	WIRING HARNESS SPFH
KE000902	LABELS
KE000870	STEERING SYSTEM
KE000589	AUTOMATIC HEADER CONTROL (AHC)
KM002545	AUTOMATIC HEADER CONTROL (AHC)
KM001592	Special equipment
KE000963	Stalk Lifters For Down-Crop - Outer and Middle

ATTACHING FRAME (KE000591)

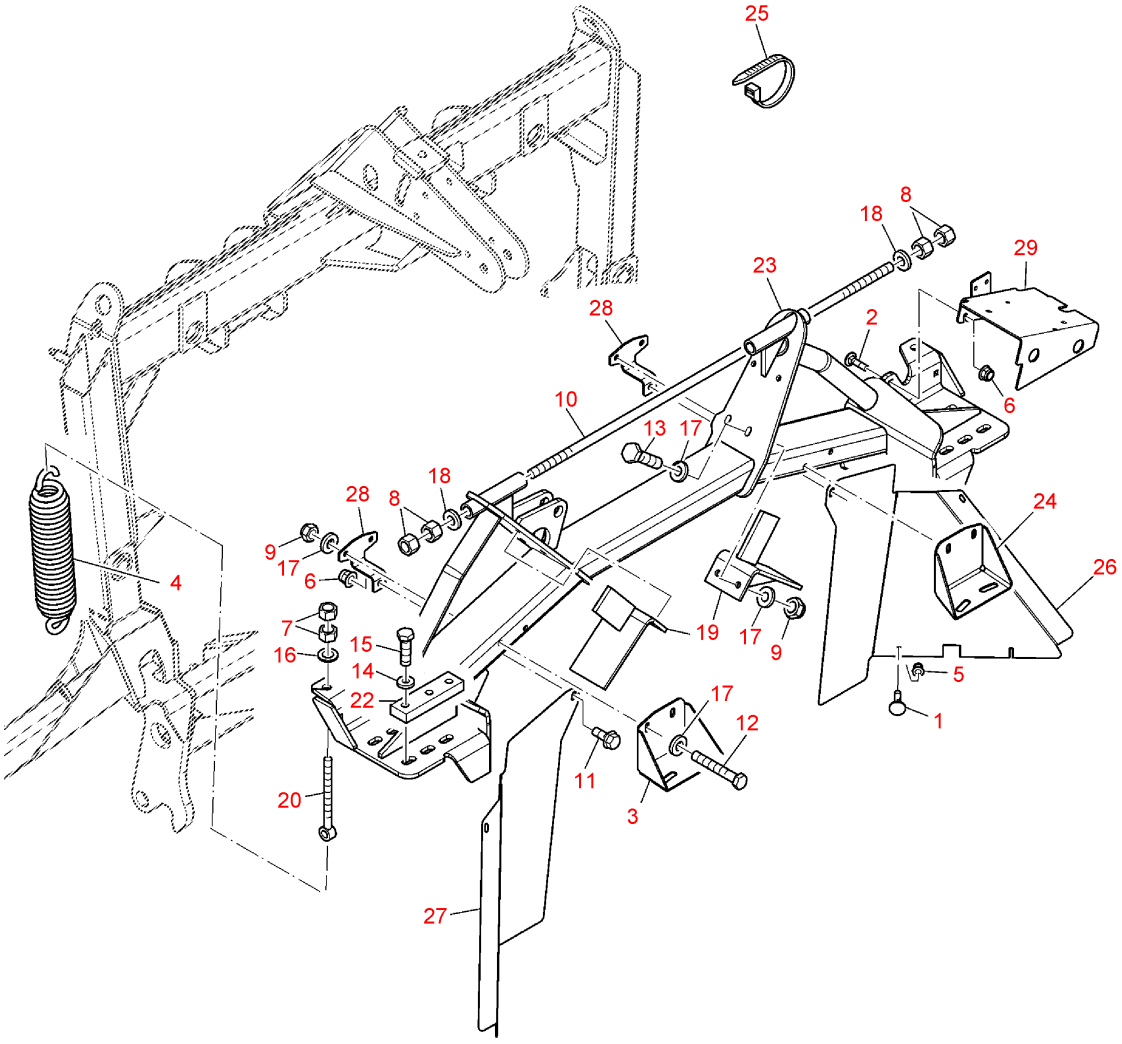

KE000591

ATTACHING FRAME (KE000591)

Item no.	Article no.	Description	Quantity	remarks
1	03M7433	BOLT	AR	M6x20
2	03M7472	BOLT	2	M10x30
3	121365	SHEET	1	RH
4	Z67236	EXTENSION SPRING	1	
5	14M7397	NUT	AR	M6
6	14M7400	NUT	4	M10
7	14M7616	NUT	4	M16
8	14M7658	NUT	4	M20
9	14M7660	NUT	4	M10
10	LCA94733	ROD	1	
11	19M7784	CAP SCREW	AR	M10x20
12	19M9582	CAP SCREW	4	M10x150
13	19M9641	CAP SCREW	4	M10x35
14	LCA89595	LOCK WASHER	12	
15	19M9901	CAP SCREW	12	M16x70
16	24M7479	WASHER	2	
17	24M7488	WASHER	8	
18	24M7500	WASHER	2	
19	106385	STOP	2	
20	21M7590	EYEBOLT	2	M16x260
22	LCA107038	STRAP	4	
23	115019	BRACKET	1	
24	121364	SHEET	1	LH
25	LCA48414	TIE BAND	AR	
26	130267	GUARD	1	
27	130268	GUARD	1	
28	LCA130269	SHEET	2	
29	LCA129922	BRACKET	1	

ATTACHING FRAME (KE000592)

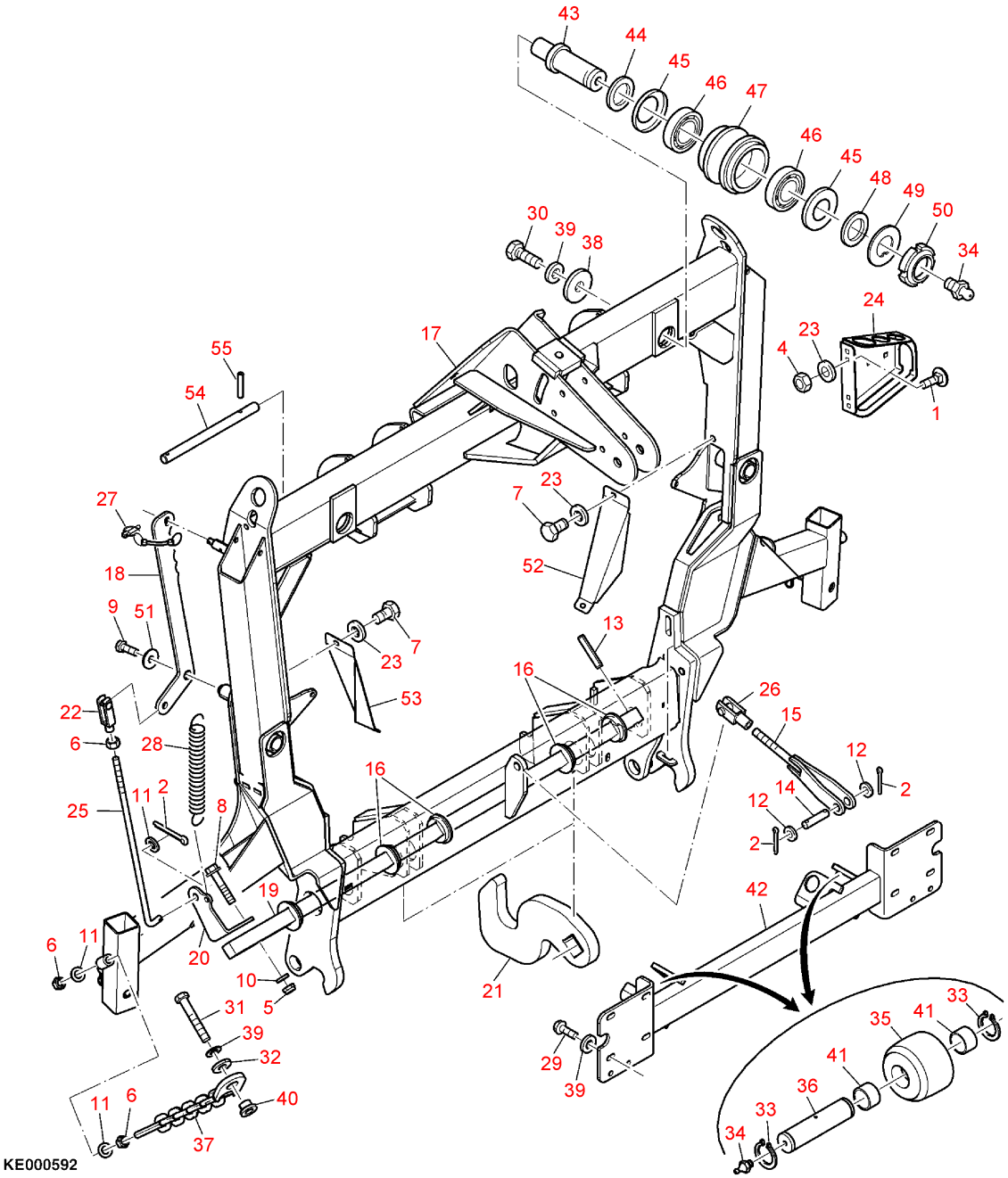

ATTACHING FRAME (KE000592)

Item no.	Article no.	Description	Quantity	remarks
1	03M7393	BOLT	2	M8x25
2	11M7110	COTTER PIN	3	5x32
3	14M7617	NUT	1	M20
4	14M7624	NUT	2	M8
5	14M7660	NUT	2	M10
6	14M7662	NUT	1	M12
7	19M9682	CAP SCREW	4	M8x20
8	19M8292	CAP SCREW	2	M10x50
9	19M9638	CAP SCREW	1	M10x20
10	24M7488	WASHER	AR	
11	24M7491	WASHER	5	
12	24M7497	WASHER	2	
13	34M7341	SPRING PIN	1	
14	LCA104755	PIN FASTENER	1	
15	LCA117638	ROD	1	
16	LCA115750	BUSHING	4	
17	129921	FRAME	1	
18	LCA109565	LEVER	1	
19	LCA109979	SHAFT	1	
20	LCA115079	SHEET	1	
21	LCA117644	HOOK	2	
22	LCA62028	SPRING LOCKING PIN	1	
23	LCA84221	LOCK WASHER	2	
24	LCA90585	RETAINER	1	
25	LCA118075	ROD	1	
26	LCA91409	SPRING LOCKING PIN	1	
27	LCA92255	QUICK LOCK PIN	3	
28	LCA94416	EXTENSION SPRING	1	
29	19M9657	CAP SCREW	4	M16x35
30	19M9659	CAP SCREW	2	M16x45
31	19M9660	CAP SCREW	2	M16x50
32	24M7479	WASHER	2	
33	40M7349	SNAP RING	4	
34	58M7017	LUBRICATION FITTING	2	
35	LCA106331	ROLLER	2	
36	LCA106332	PIN FASTENER	2	

ATTACHING FRAME (KE000592)

Item no.	Article no.	Description	Quantity	remarks
37	LCA107096	LINK CHAIN	2	
38	LCA67639	WASHER	2	
39	LCA89595	LOCK WASHER	AR	
40	LCA89874	BUSHING	2	
41	LCA95845	BUSHING	4	
42	LCA115029	BRACKET	1	
43	LCA91502	SHAFT	2	
44	24M7594	WASHER	2	
45	LCA29460	SEALING WASHER	4	
46	LCA05119	TAPERED ROLLER BEARING	4	
47	LCA91501	ROLLER	2	
48	24M4813	SHIM	2	
49	LCA91503	LOCK PLATE	2	
50	LCA92218	NUT	2	
51	24M7489	WASHER	1	
52	123177	SHEET	1	LH
53	123178	SHEET	1	RH
54	LCA92111	PIN FASTENER	2	
55	34M7269	SPRING PIN	2	

POINTER STANDARD (KM001788)

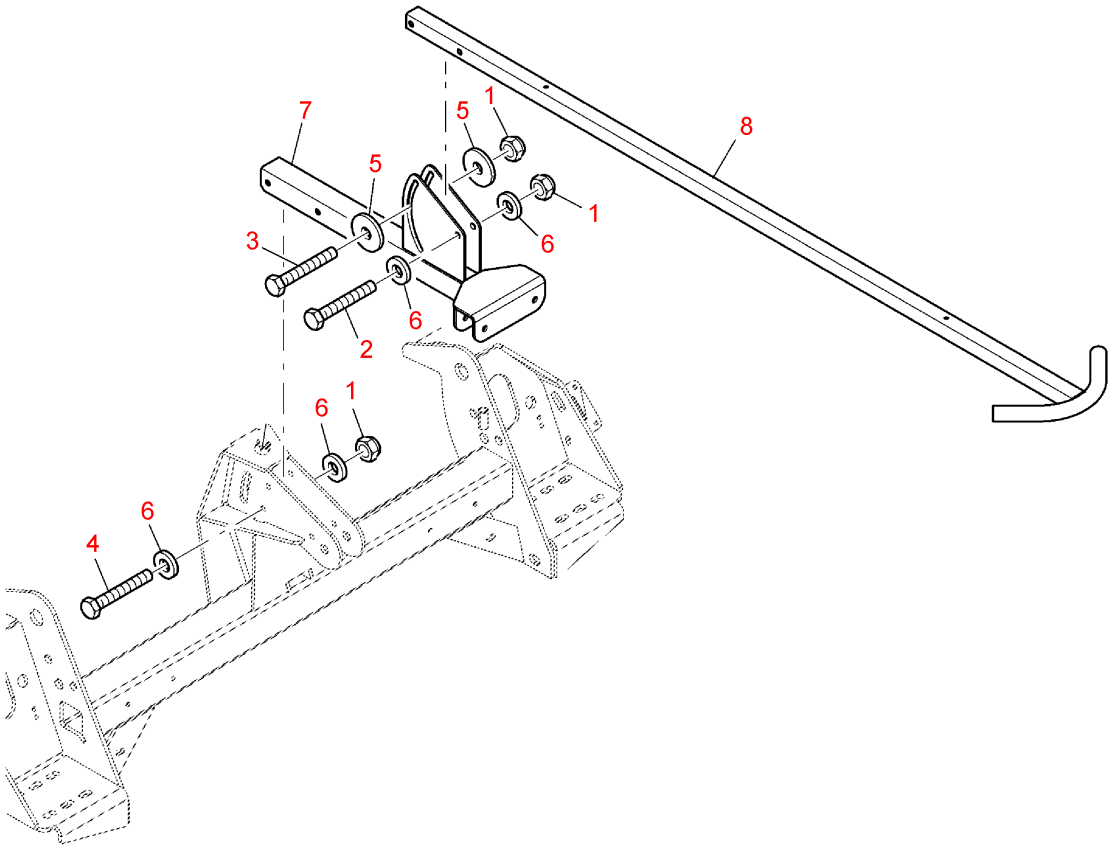

KM001788

POINTER STANDARD (KM001788)

Item no.	Article no.	Description	Quantity	remarks
1	14M7670	NUT	4	M12
2	19M9603	CAP SCREW	1	M12x70
3	19M10123	CAP SCREW	1	M12x75
4	19M10125	CAP SCREW	2	M12x95
5	24M7484	WASHER	2	
6	24M7491	WASHER	6	
7	LCA114698	SUPPORT	1	
8	129639	POINTER	1	

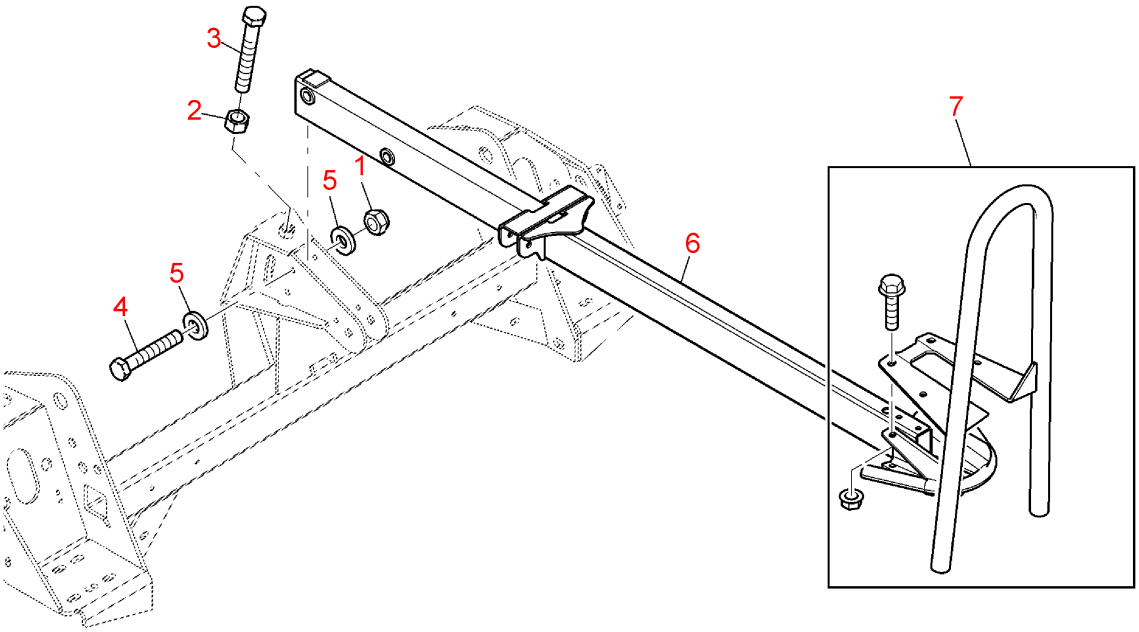

KM001848

POINTER FOR SUPPORT WHEEL (KM001848)

Item no.	Article no.	Description	Quantity	remarks
1	14M7667	NUT	2	M20
2	14M7617	NUT	2	M20
3	19M9452	CAP SCREW	1	M20x130
4	19M10042	CAP SCREW	2	M20x120
5	24M7615	WASHER	4	
6	125155	POINTER	1	
7	122065	FRAME	1	KIT

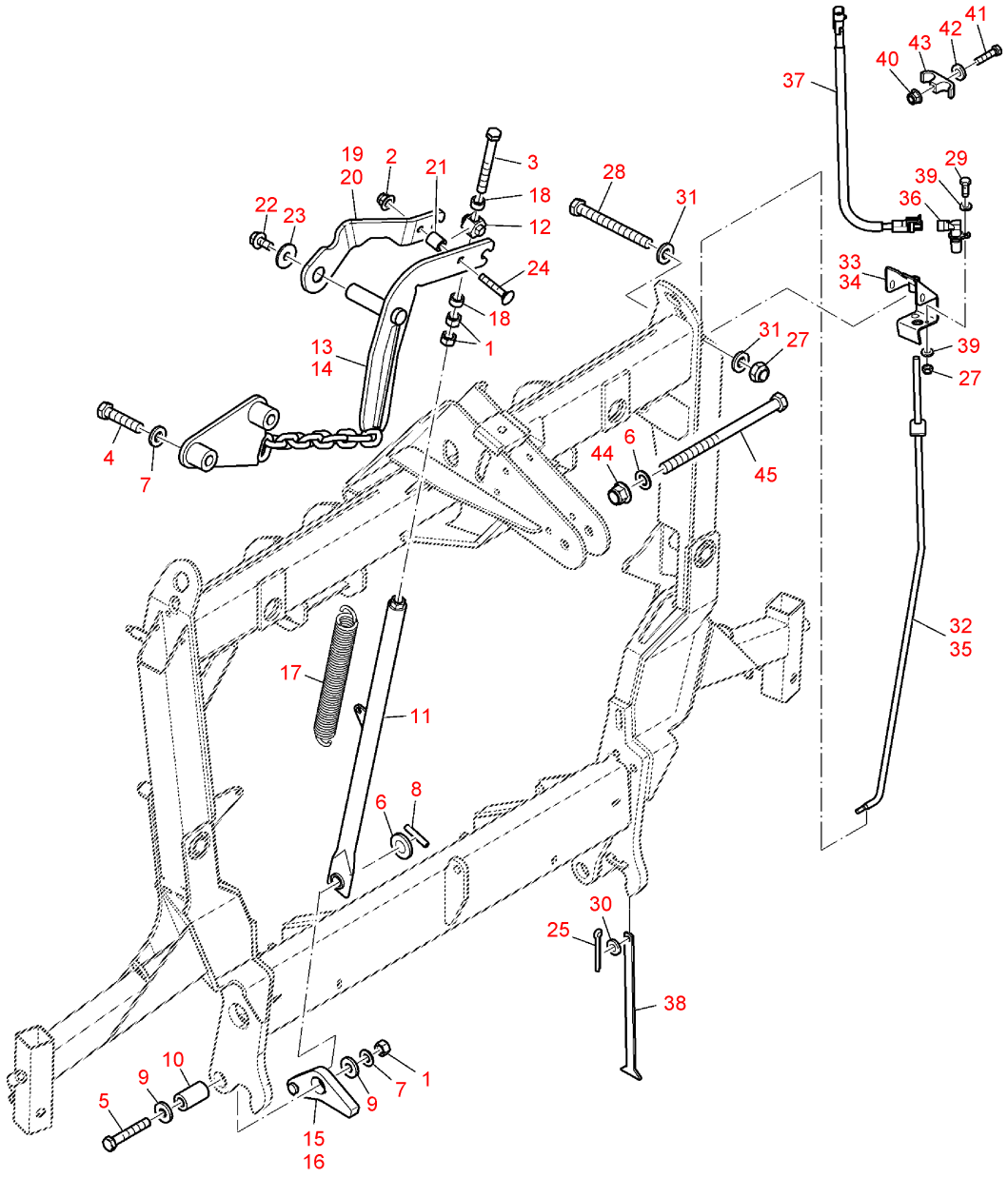
41
42
43
40
37
19
2
21
3
28
29
39
36
20
18
31
22
23
12
24
33
34
18
1
31
27
39
13
14
27
4
7
6
44
45
32
35
17
11
6
8
30
25
38
10
9
5
7
1
9
15
16

KE000586

Attachments for Comfort Wheel (KE000586)

Item no.	Article no.	Description	Quantity	remarks
1	14M7616	NUT	6	M16
2	14M7400	NUT	2	M10
3	19M10404	CAP SCREW	2	M16x140
4	19M9610	CAP SCREW	2	M16x70
5	19M9965	CAP SCREW	2	M16x95
6	24M7500	WASHER	4	
7	LCA89595	LOCK WASHER	4	
8	34M7311	SPRING PIN	2	
9	24M7479	WASHER	4	
10	LCA104372	TUBE	2	
11	106212	BRACE	2	
12	LCA106782	BUSHING	2	
13	LCA135900	LINK CHAIN	1	
14	LCA135899	LINK CHAIN	1	
15	104470	LEVER	1	LH
16	104471	LEVER	1	RH
17	LCA94416	EXTENSION SPRING	2	
18	LCA96462	BUSHING	4	
19	LCA117637	SHEET	1	RH
20	LCA117636	SHEET	1	LH
21	LCA117612	BUSHING	2	
22	19M7784	CAP SCREW	2	M10x20
23	24M7483	WASHER	2	
24	03M7451	BOLT	2	M10x60
25	11M7124	COTTER PIN	2	3,2x16
26	14M7659	NUT	2	M8
27	14M7668	NUT	1	M6
28	19M9625	CAP SCREW	2	M8x100
29	19M9676	CAP SCREW	4	M6x20
30	24M7489	WASHER	2	
31	24M7509	WASHER	4	
32	LCA117594	ROD	1	LH
33	104703	RETAINER	1	LH
34	104704	RETAINER	1	RH
35	LCA117595	PIN FASTENER	1	RH
36	LCA106245	ADAPTER KIT	1	

Attachments for Comfort Wheel (KE000586)

Item no.	Article no.	Description	Quantity	remarks
37	LCA121314	WIRING HARNESS	1	
38	LCA115094	SENSOR	2	
39	LCA90841	LOCK WASHER	2	
40	14M7397	NUT	1	M6
41	19M10112	CAP SCREW	1	M6x35
42	24M7506	WASHER	4	
43	Z44220	BLOCK CLAMP	4	
44	14M7428	Flange Nut	2	M20
45	19M7953	CAP SCREW	2	M20x300

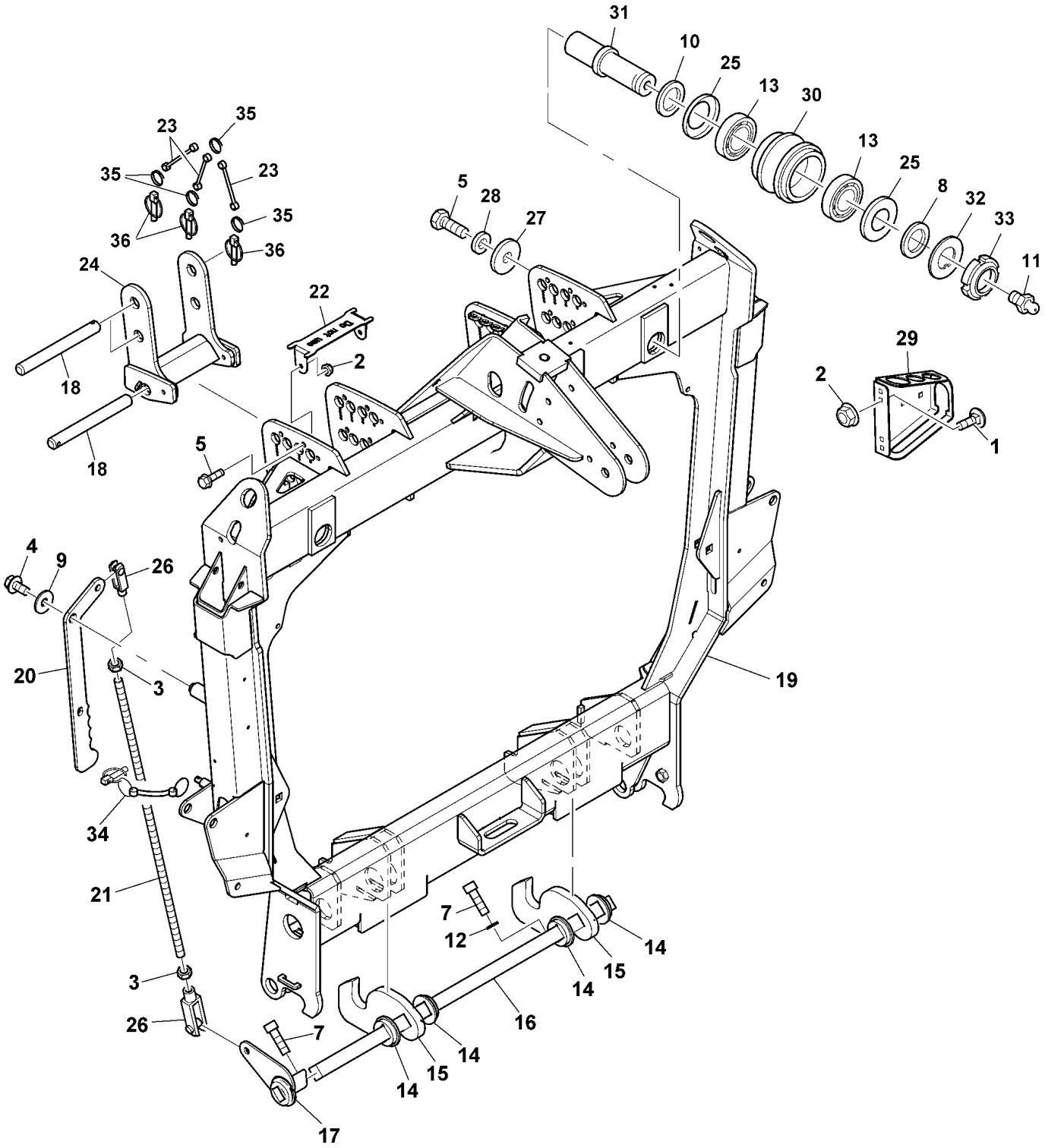
31
10
25
13
30
13
25
8
32
33
11
35
23
35
23
35
36
36
5
28
27
24
22
2
18
18
29
2
1
5
4
9
26
20
3
19
34
21
7
12
14
15
14
3
26
7
16
14
15
14
17

KE000904

ATTACHING FRAME (KE000904)

Item no.	Article no.	Description	Quantity	remarks
1	03M7393	BOLT	2	M8x25
2	14M7298	Flange Nut	6	M8
3	14M7662	NUT	2	M12
4	19M7784	CAP SCREW	1	M10x20
5	19M9569	CAP SCREW	4	M8x25
6	19M9659	CAP SCREW	2	M16x45
7	19M9715	BOLT	2	M12x40
8	24M4813	SHIM	2	
9	24M7489	WASHER	1	
10	24M7594	WASHER	2	
11	58M7017	LUBRICATION FITTING	2	
12	LCA03356	LOCK WASHER	1	
13	LCA05119	TAPERED ROLLER BEARING	4	
14	LCA121935	BUSHING	4	
15	LCA121936	HOOK	2	
16	LCA125323	SHAFT	1	
17	LCA142815	BRACKET	1	
18	LCA125336	PIN FASTENER	6	
19	138210	FRAME	1	
20	LCA134481	LEVER	1	
21	LCA134483	ROD	1	
22	LCA134484	SHEET	2	
23	LCA38899	ROPE	6	
24	136609	BRACKET	1	
25	LCA29460	SEALING WASHER	4	
26	LCA62028	SPRING LOCKING PIN	2	
27	LCA67639	WASHER	2	
28	LCA89595	LOCK WASHER	2	
29	LCA90585	RETAINER	1	
30	LCA91501	ROLLER	2	
31	LCA91502	SHAFT	2	
32	LCA91503	LOCK PLATE	2	
33	LCA92218	NUT	2	
34	LCA92255	QUICK LOCK PIN	1	
35	LCA38941	RING	8	
36	99M7144	QUICK LOCK PIN	6	

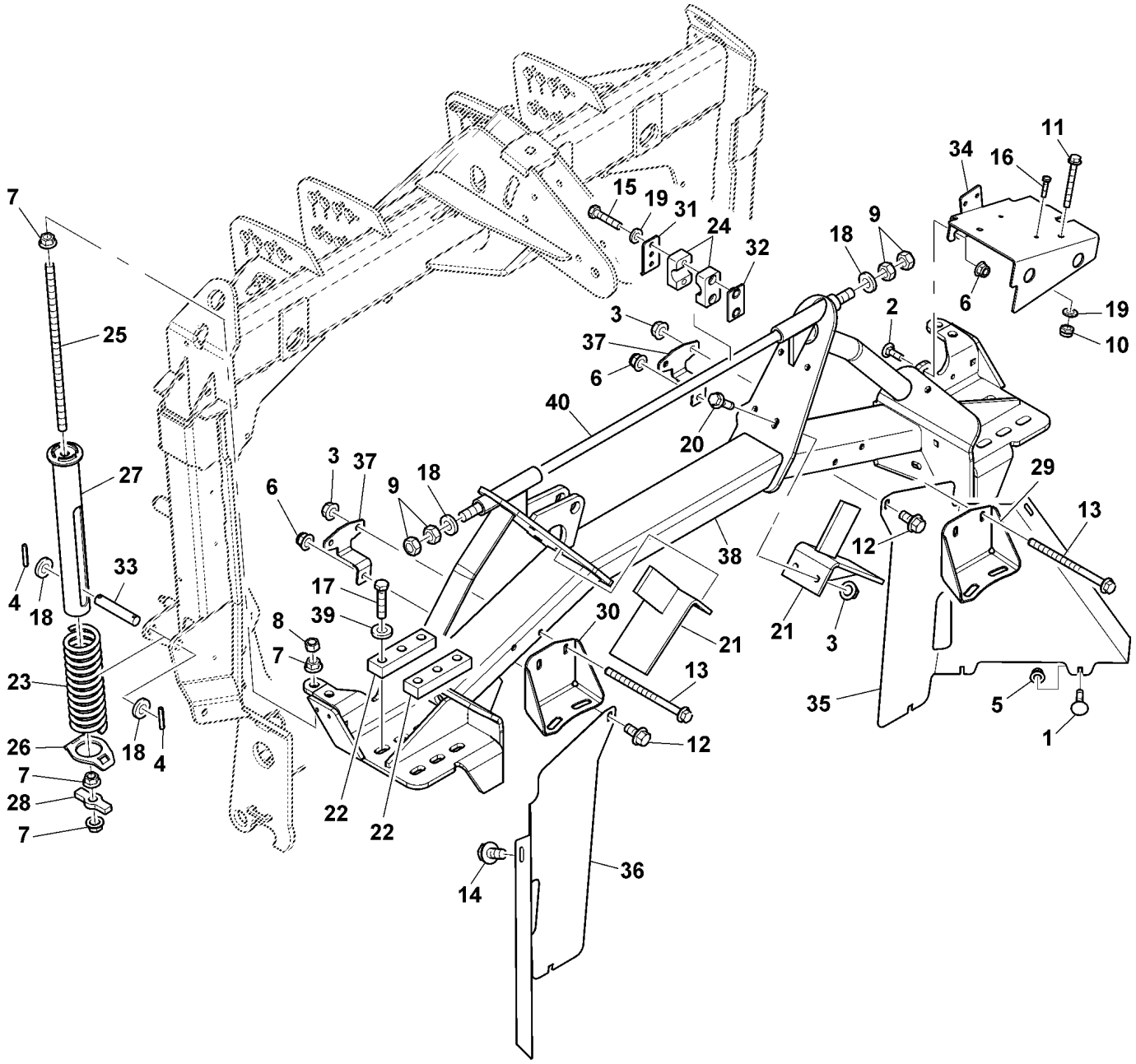
7
25
27
4
18
33
23
26
18
4
7
28
7
15
19
31
24
32
3
37
6
40
20
3
37
6
9
18
17
39
8
7
22
22
14
36
18
9
2
34
16
11
6
19
10
29
13
12
38
21
30
21
3
13
12
35
5
1

KE000903

ATTACHING FRAME (KE000903)

Item no.	Article no.	Description	Quantity	remarks
1	03M7433	BOLT	AR	M6x20
2	03M7472	BOLT	2	M10x30
3	14M7296	Flange Nut	4	M10
4	34M7301	SPRING PIN	4	
5	14M7397	NUT	AR	M6
6	14M7400	NUT	2	M10
7	14M7590	Flange Nut	4	M16
8	14M7616	NUT	2	M16
9	14M7658	NUT	4	M20
10	14M7668	NUT	2	M6
11	19M10300	CAP SCREW	2	M8x70
12	19M7784	CAP SCREW	2	M10x20
13	19M7958	CAP SCREW	4	M10x150
14	19M9567	CAP SCREW	2	M8x16
15	19M9620	CAP SCREW	2	M6x45
16	19M9677	CAP SCREW	2	M6x25
17	19M9901	CAP SCREW	12	M16x70
18	24M7500	WASHER	6	
19	24M7506	WASHER	AR	
20	19M7835	CAP SCREW	4	M10x35
21	106385	STOP	2	
22	LCA107038	STRAP	4	
23	LCA116579	COMPRESSION SPRING	2	
24	LCA118371	BLOCK CLAMP	1	
25	LCA119625	ROD	2	
26	LCA119627	SHEET	2	
27	LCA119629	TUBE	2	
28	LCA119631	SHEET	2	
29	121364	SHEET	1	
30	121365	SHEET	1	
31	LCA123985	SHEET	1	
32	LCA123992	PLATE	1	
33	LCA125334	PIN FASTENER	2	
34	LCA129922	BRACKET	1	
35	130267	GUARD	1	
36	130268	GUARD	1	

ATTACHING FRAME (KE000903)

Item no.	Article no.	Description	Quantity	remarks
37	LCA130269	SHEET	2	
38	134452	BRACKET	1	
39	LCA89595	LOCK WASHER	12	
40	LCA94733	ROD	1	

ATTACHING FRAME (KE000905)

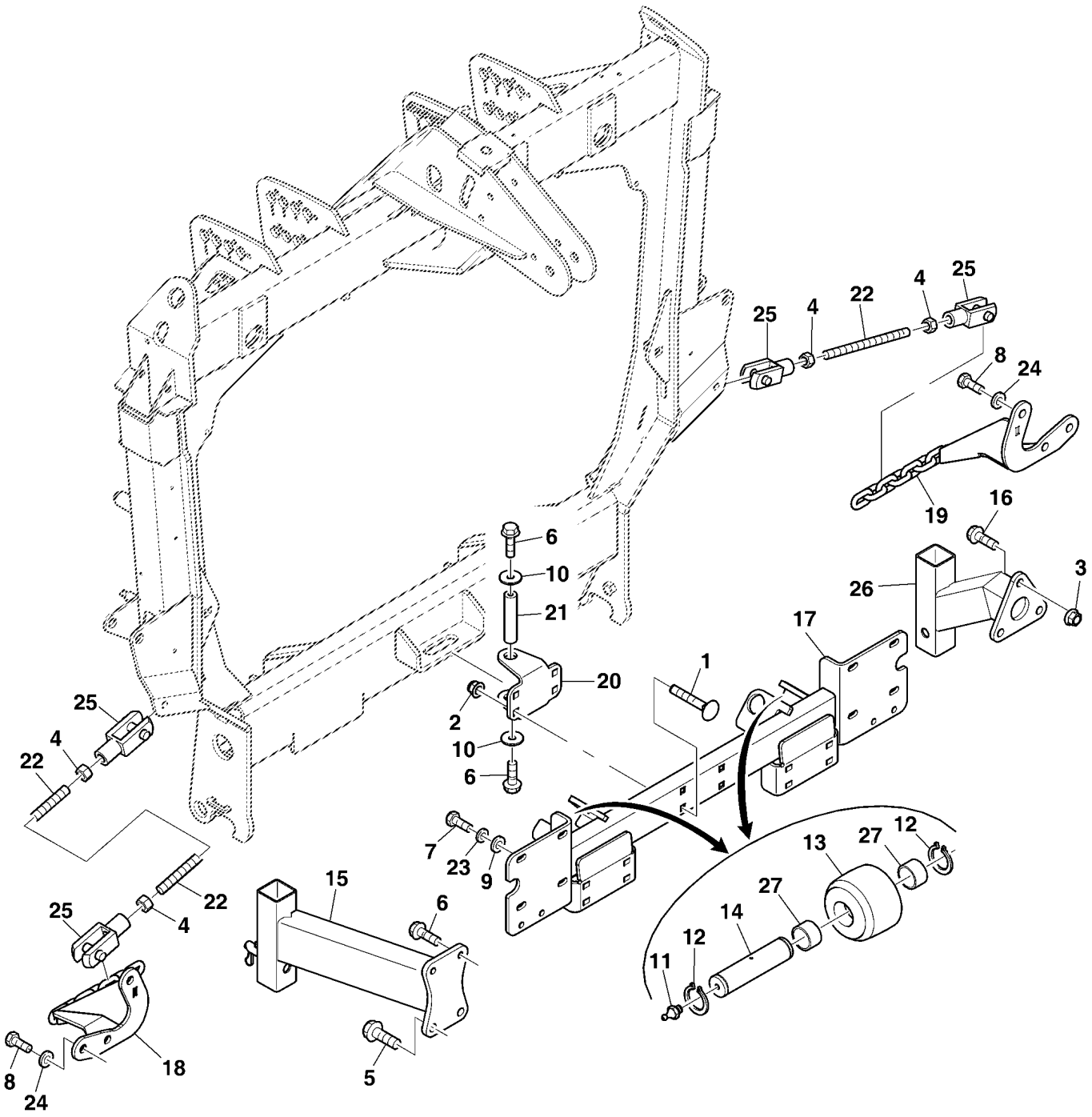

KE000905

ATTACHING FRAME (KE000905)

Item no.	Article no.	Description	Quantity	remarks
1	03M7423	BOLT	4	M12x75
2	14M7401	Flange Nut	4	M12
3	14M7590	Flange Nut	3	M16
4	14M7662	NUT	4	M12
5	19M7844	CAP SCREW	2	M16x45
6	19M9571	Cap Screw	4	M12x30
7	19M9640	CAP SCREW	8	M10x30
8	19M9657	CAP SCREW	6	M16x35
9	24M7477	WASHER	8	
10	24M7484	WASHER	2	
11	58M7017	LUBRICATION FITTING	2	
12	40M7349	SNAP RING	4	
13	LCA106331	ROLLER	2	
14	LCA106332	PIN FASTENER	2	
15	LCA119426	BRACKET	1	
16	LCA121166	CAP SCREW	3	
17	LCA123987	BRACKET	1	
18	134394	BRACKET	1	RH
19	134393	BRACKET	1	LH
20	LCA134479	SHEET	1	
21	LCA134480	BUSHING	1	
22	LCA136605	ROD	2	
23	LCA71878	LOCK WASHER	8	
24	LCA89595	LOCK WASHER	6	
25	LCA62028	SPRING LOCKING PIN	4	
26	LCA134391	BRACKET	1	
27	LCA95845	BUSHING	4	

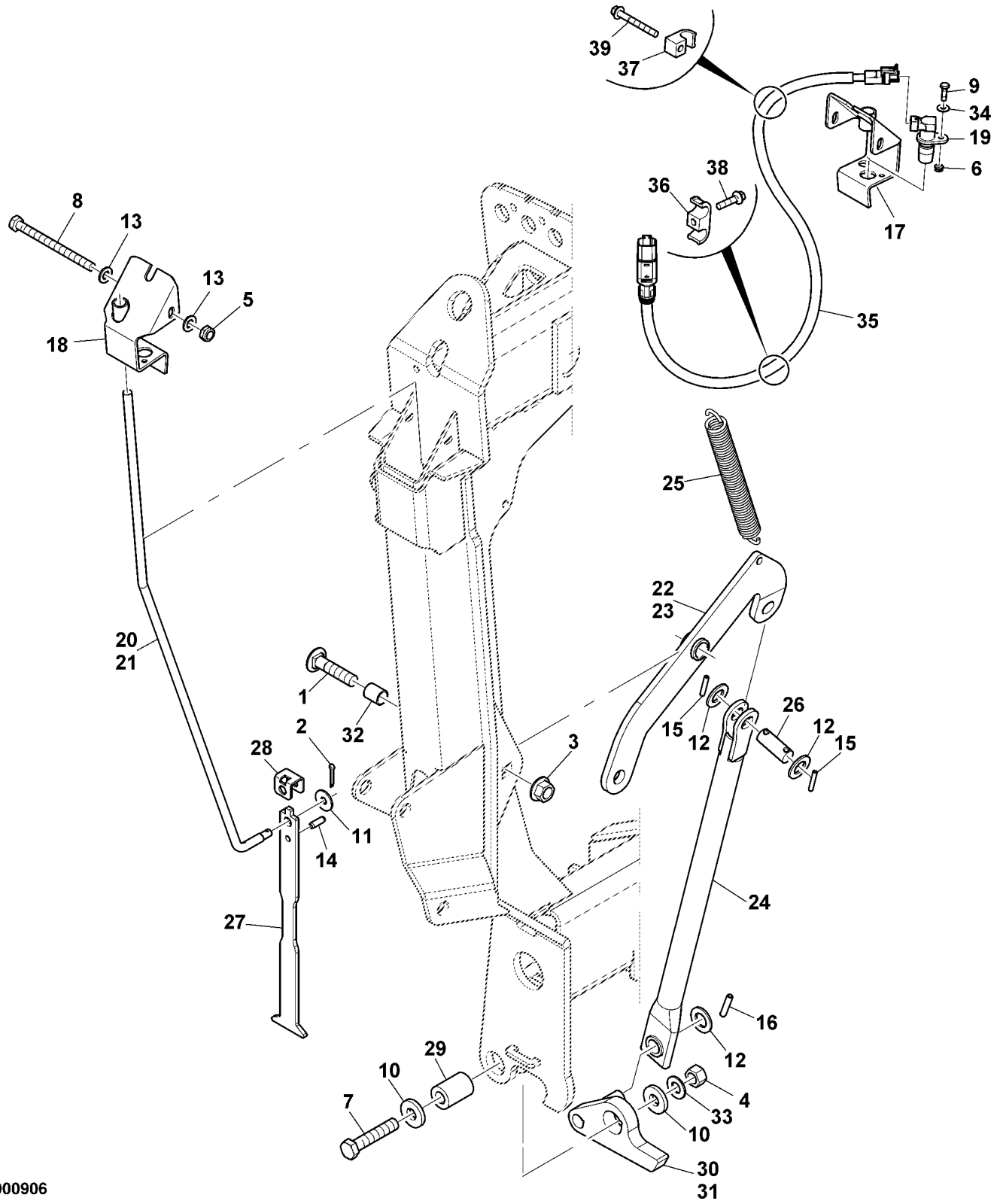
39
37
9
34
19
6
38
36
17
35
8
13
13
5
18
25
22
23
20
21
1
32
2
28
3
15
12
26
12
15
11
14
27
24
16
12
29
10
7
4
33
10
30
31

KE000906

Attachments for Comfort Wheel (KE000906)

Item no.	Article no.	Description	Quantity	remarks
1	03M7388		2	M16x70
2	11M7124	COTTER PIN	2	3,2x16
3	14M7590	Flange Nut	2	M16
4	14M7616	NUT	2	M16
5	14M7659	NUT	2	M8
6	14M7668	NUT	1	M6
7	19M9611	CAP SCREW	2	M16x80
8	19M9625	CAP SCREW	2	M8x100
9	19M9676	CAP SCREW	1	M6x20
10	24M7479	WASHER	4	
11	24M7489	WASHER	2	
12	24M7500	WASHER	6	
13	24M7509	WASHER	4	
14	34M7297	SPRING PIN	2	
15	34M7301	SPRING PIN	4	
16	34M7311	SPRING PIN	2	
17	104703	RETAINER	1	LH
18	104704	RETAINER	1	RH
19	LCA106245	ADAPTER KIT	1	
20	LCA117594	ROD	1	LH
21	LCA117595	PIN FASTENER	1	RH
22	119645	LEVER	1	LH
23	119646	LEVER	1	RH
24	119659	BRACE	2	
25	LCA94416	EXTENSION SPRING	2	
26	LCA125302	PIN FASTENER	2	
27	LCA125311	SHEET	2	
28	LCA125313	SHEET	2	
29	LCA125338	BUSHING	2	
30	125785	LEVER	1	LH
31	125786	LEVER	1	RH
32	LCA133416	BUSHING	2	
33	LCA89595	LOCK WASHER	2	
34	LCA90841	LOCK WASHER	1	
35	LCA121314	WIRING HARNESS	1	
36	Z44220	BLOCK CLAMP	2	

Attachments for Comfort Wheel (KE000906)

Item no.	Article no.	Description	Quantity	remarks
37	Z34952	BLOCK CLAMP	2	
38	37M7091	SCREW	2	M6x25
39	37M7232	SCREW	2	M6x55

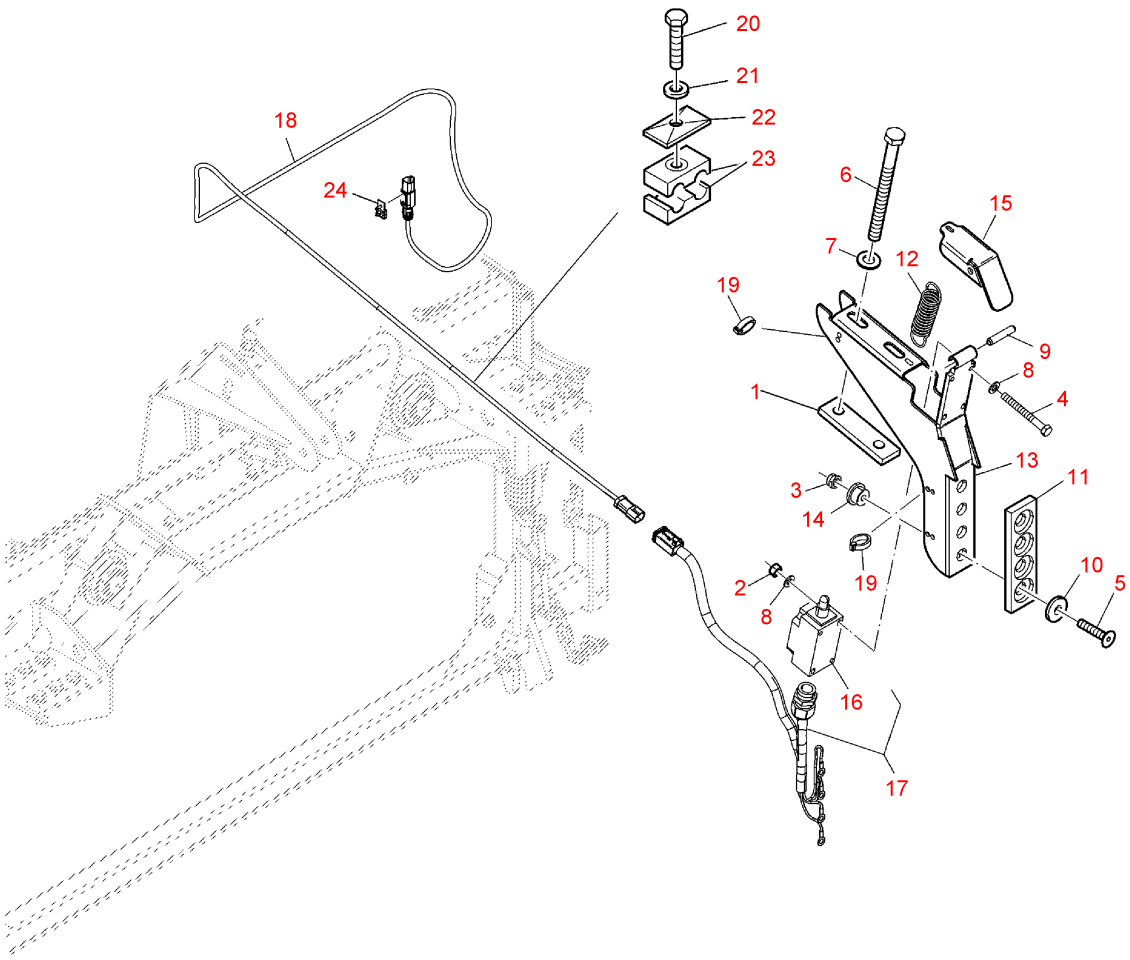

KM001838

ELECTRIC FOR COMFORT WHEEL (KM001838)

Item no.	Article no.	Description	Quantity	remarks
1	LCA121342	SHEET	1	
2	14M7621	NUT	4	M5
3	14M7663	NUT	4	M5
4	19M8834	CAP SCREW	4	M5x45
5	19M9266	SCREW	4	M5x25
6	19M9579	CAP SCREW	2	M10x120
7	24M7488	WASHER	2	
8	24M7502	WASHER	8	
9	34M3875	SPRING PIN	1	
10	LCA110789	SHEET	4	
11	LCA110790	RETAINER	1	
12	LCA66400	EXTENSION SPRING	1	
13	LCA121418	RETAINER	1	
14	LCA111562	BUSHING	4	
15	LCA121419	SHEET	1	
16	LCA111659	SHIFT COLLAR	1	
17	LCA111997	WIRING HARNESS	1	
18	LCA119848	WIRING HARNESS	1	
19	LCA44646	TIE BAND	3	
20	19M9620	CAP SCREW	2	M6x45
21	24M7506	WASHER	2	
22	LCA83295	PLATE	2	
23	LCA79185	CLAMP	2	
24	LCA111943	Elec.Control Locking Device	1	

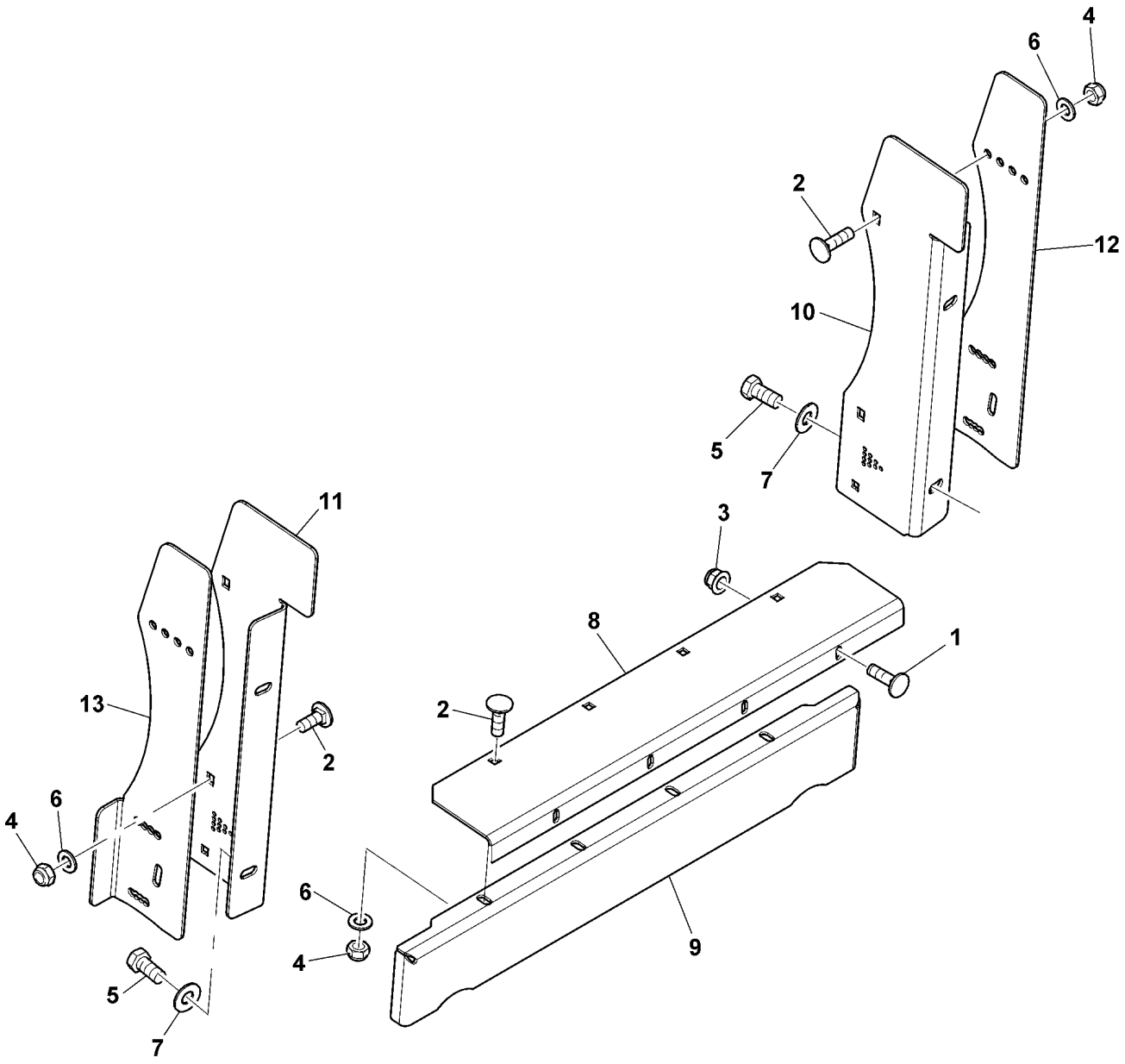

KE000907

INTAKE PLATE (KE000907)

Item no.	Article no.	Description	Quantity	remarks
1	03M7184	BOLT	4	M8x20
2	03M7191	BOLT	10	M10x25
3	14M7396	NUT	4	M8
4	14M7660	NUT	10	M10
5	19M9647	CAP SCREW	4	M12x25
6	24M7488	WASHER	10	
7	LCA72740	LOCK WASHER	4	
8	115082	SHEET	1	
9	117647	SHEET	1	
10	134499	SHEET	1	
11	134500	SHEET	1	
12	138046	SHEET	1	
13	138047	SHEET	1	

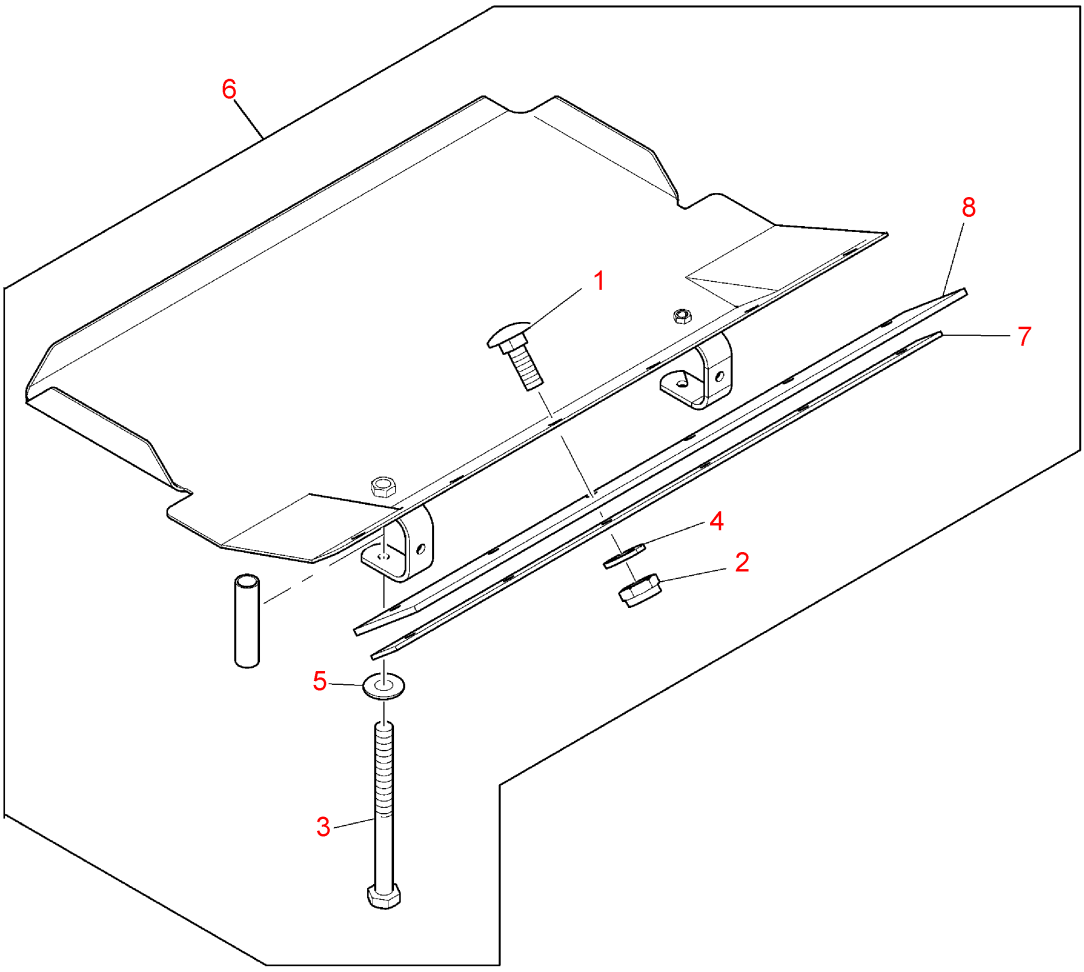

KE000580

ADAPTER KIT (KE000580)

Item no.	Article no.	Description	Quantity	remarks
1	03M7393	BOLT	6	M8x25
2	14M7659	NUT	6	M8
3	19M9635	CAP SCREW	2	M8x90
4	24M7509	WASHER	6	
5	LCA84221	LOCK WASHER	2	
6	118907	ADAPTER KIT	1	ASSY Info LCA114072
7	99783	MOLDING	1	
8	LCA118910	RAIL	1	

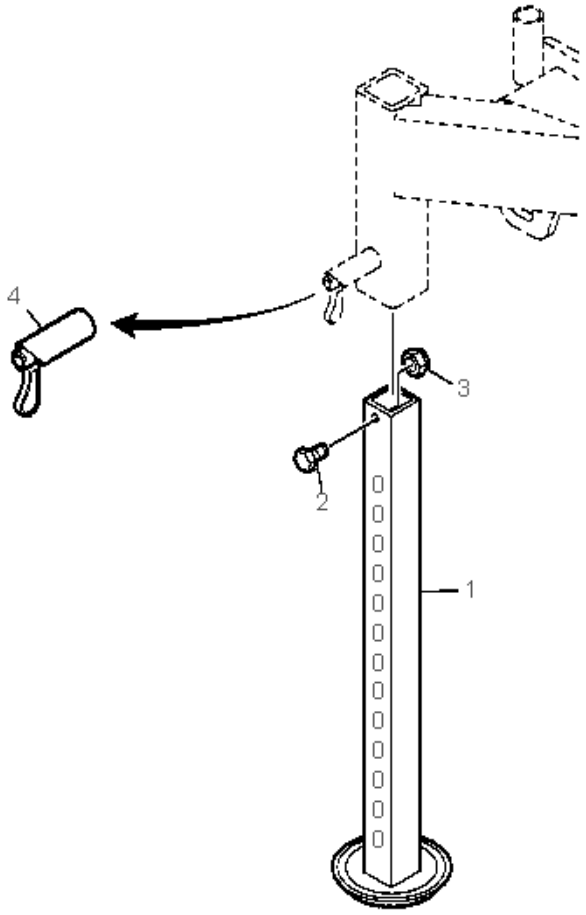

1??1000401

Support legs (KM000401)

Item no.	Article no.	Description	Quantity	remarks
1	LCA72673	STAND	2	
2	19M9674	CAP SCREW	2	M6x12
3	14M7668	NUT	2	M6
4	LCA104172	LATCH	2	

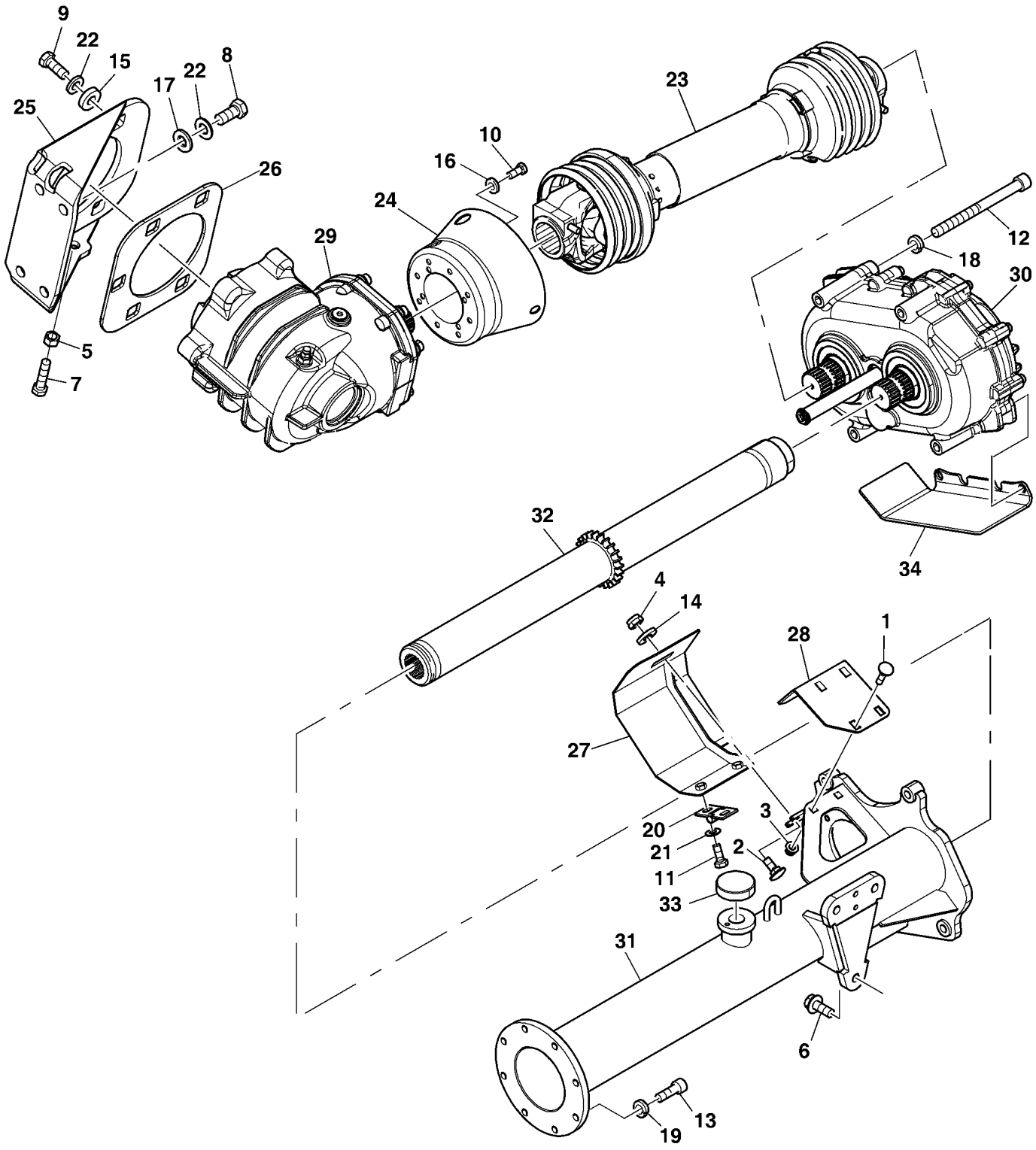
9
22
15
17
22
8
25
26
10
16
24
29
23
12
18
30
5
7
32
34
4
14
28
1
27
20
3
21
2
11
33
31
6
19
13

KE000873

DRIVES (KE000873)

Item no.	Article no.	Description	Quantity	remarks
1	03M7404	BOLT	2	M8x20
2	03M7405	BOLT	1	M10x25
3	14M7396	NUT	2	M8
4	14M7660	NUT	1	M10
5	14M7662	NUT	1	M12
6	19M9571	Cap Screw	3	M12x30
7	19M9651	CAP SCREW	1	M12x50
8	19M9657	CAP SCREW	4	M16x35
9	19M9659	CAP SCREW	5	M16x45
10	19M9681	CAP SCREW	4	M8x16
11	19M9682	CAP SCREW	4	M8x20
12	19M10371	BOLT	4	M12x140
13	19M10474	BOLT	8	M10x30
14	24M7477	WASHER	1	
15	24M7479	WASHER	5	
16	24M7509	WASHER	4	
17	24M7529	WASHER	4	
18	LCA03356	LOCK WASHER	4	
19	LCA40940	LOCK WASHER	8	
20	LCA60311	HINGE	2	
21	LCA84221	LOCK WASHER	4	
22	LCA89595	LOCK WASHER	9	
23	LCA110087	UNIVERSAL DRIVESHAFT	1	
24	LCA111005	POWERSHAFT SHIELD	1	
25	111006	BRACKET	1	
26	LCA111007	SHEET	1	
27	111178	SHIELD	1	
28	113283	SHEET	1	
29	115749	TRANSMISSION	1	
30	115752	TRANSMISSION	1	
31	LCA129015	CROSSBAR	1	
32	LCA121943	SHAFT	1	
33	LCA119790	PLUG	1	
34	LCA131127	WEAR PLATE	1	

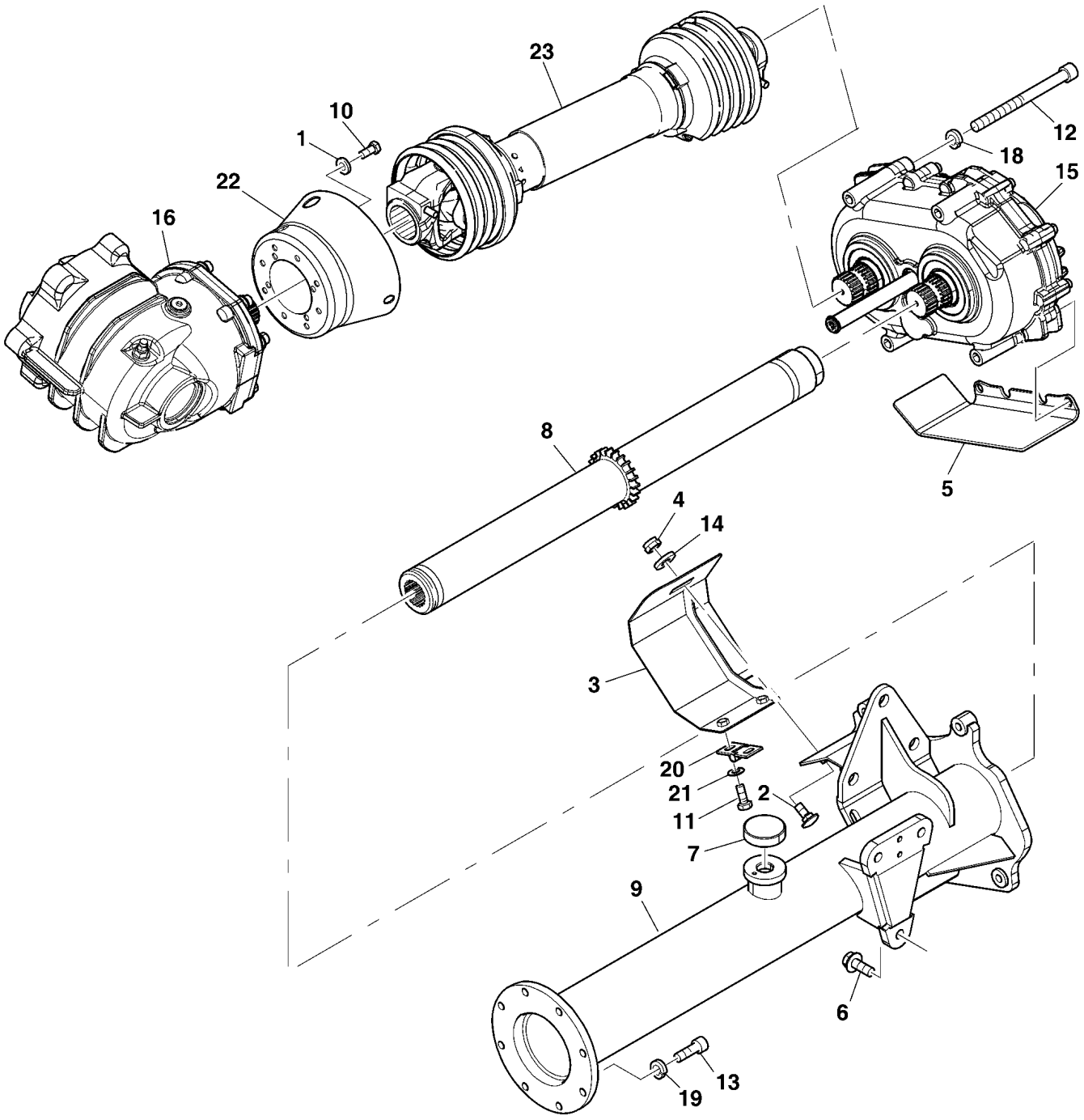

KE000885

DRIVES (KE000885)

Item no.	Article no.	Description	Quantity	remarks
1	24M7509	WASHER	4	
2	03M7405	BOLT	1	M10x25
3	134409	SHIELD	1	
4	14M7660	NUT	1	M10
5	LCA131127	WEAR PLATE	1	
6	19M9571	Cap Screw	3	M12x30
7	LCA119790	PLUG	1	
8	LCA121943	SHAFT	1	
9	LCA136646	CROSSBAR	1	
10	19M9681	CAP SCREW	4	M8x16
11	19M9682	CAP SCREW	4	M8x20
12	19M10371	BOLT	4	M12x140
13	19M10474	BOLT	8	M10x30
14	24M7477	WASHER	1	
15	115752	TRANSMISSION	1	
16	115749	TRANSMISSION	1	
17	24M7529	WASHER	4	
18	LCA03356	LOCK WASHER	4	
19	LCA40940	LOCK WASHER	8	
20	LCA60311	HINGE	2	
21	LCA84221	LOCK WASHER	4	
22	LCA111005	POWERSHAFT SHIELD	1	
23	LCA110087	UNIVERSAL DRIVESHAFT	1	

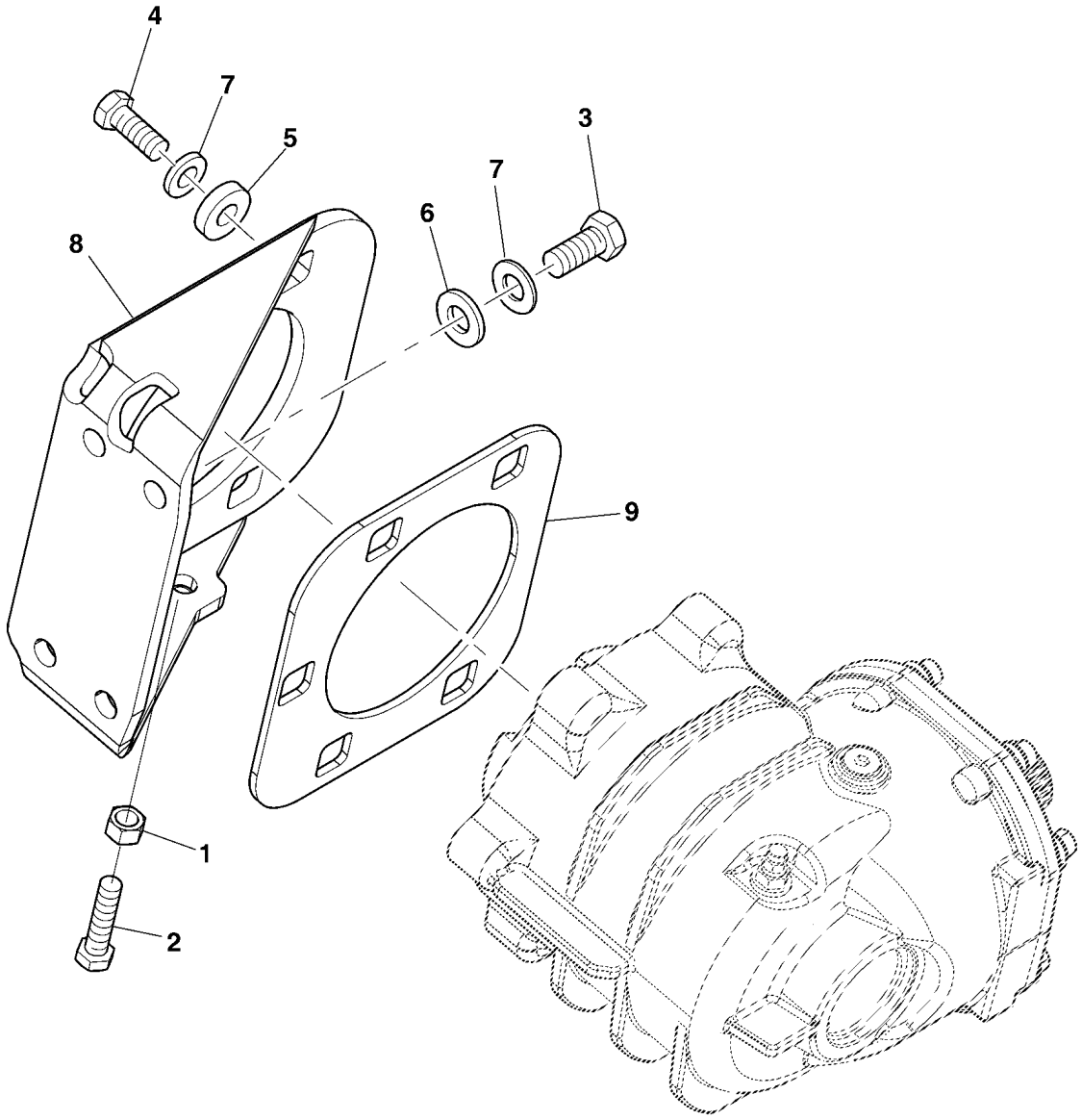

KE000886

BRACKET (KE000886)

Item no.	Article no.	Description	Quantity	remarks
1	14M7662	NUT	1	M12
2	19M9651	CAP SCREW	1	M12x50
3	19M9657	CAP SCREW	4	M16x35
4	19M9659	CAP SCREW	4	M16x45
5	24M7479	WASHER	4	
6	24M7529	WASHER	4	
7	LCA89595	LOCK WASHER	8	
8	111006	BRACKET	1	
9	LCA111007	SHEET	1	

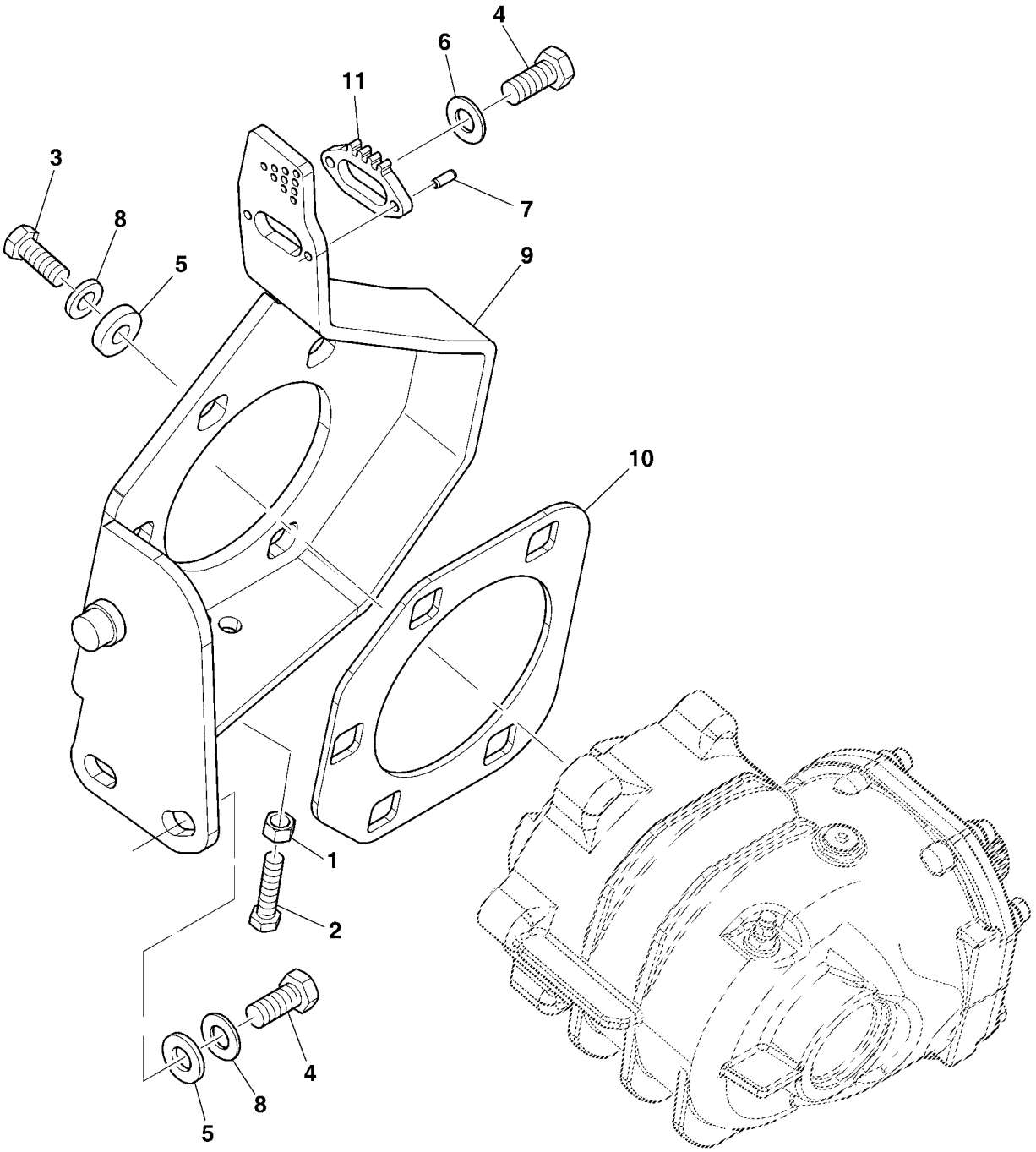

KE000887

BRACKET (KE000887)

Item no.	Article no.	Description	Quantity	remarks
1	14M7662	NUT	1	M12
2	19M9651	CAP SCREW	1	M12x50
3	19M9659	CAP SCREW	5	M16x45
4	19M9660	CAP SCREW	3	M16x50
5	24M7479	WASHER	7	
6	24M7529	WASHER	1	
7	34M7197	SPRING PIN	2	
8	LCA89595	LOCK WASHER	7	
9	134488	BRACKET	1	
10	LCA134507	SHEET	1	
11	LCA134511	SHEET	1	

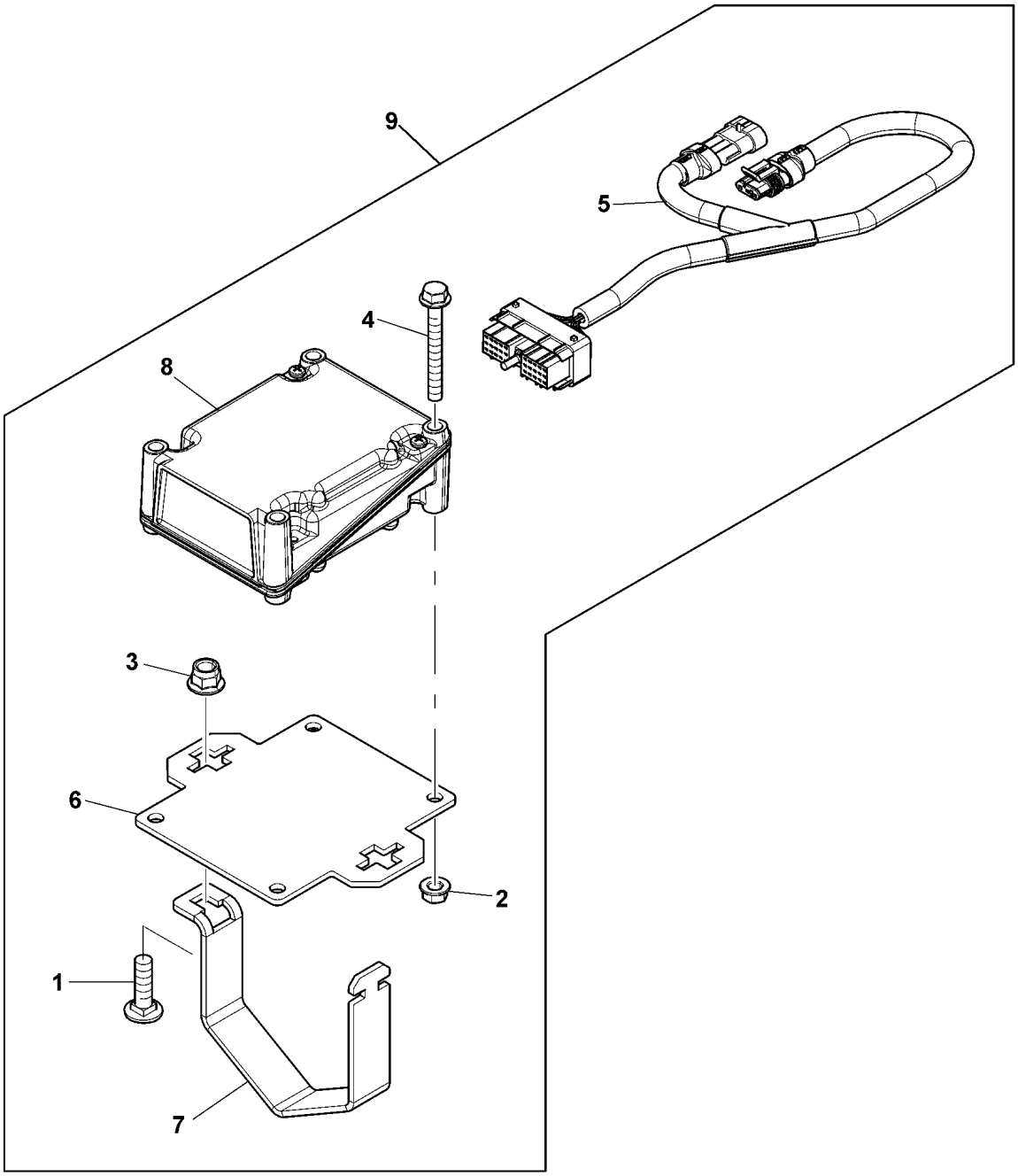

KE0000876

UCC-Box for speed sensor (KE000876)

Item no.	Article no.	Description	Quantity	remarks
1	03M7191	BOLT	1	M10x25
2	14M7298	Flange Nut	2	M8
3	14M7400	NUT	1	M10
4	19M10300	CAP SCREW	2	M8x70
5	LCA131481	WIRING HARNESS	1	
6	LCA131482	SHEET	1	
7	LCA131483	SHEET	1	
8	LCA131484	CIRCUIT BOX	1	
9	LCA131480	UCC-Box for speed sensor	1	Info LCA131497

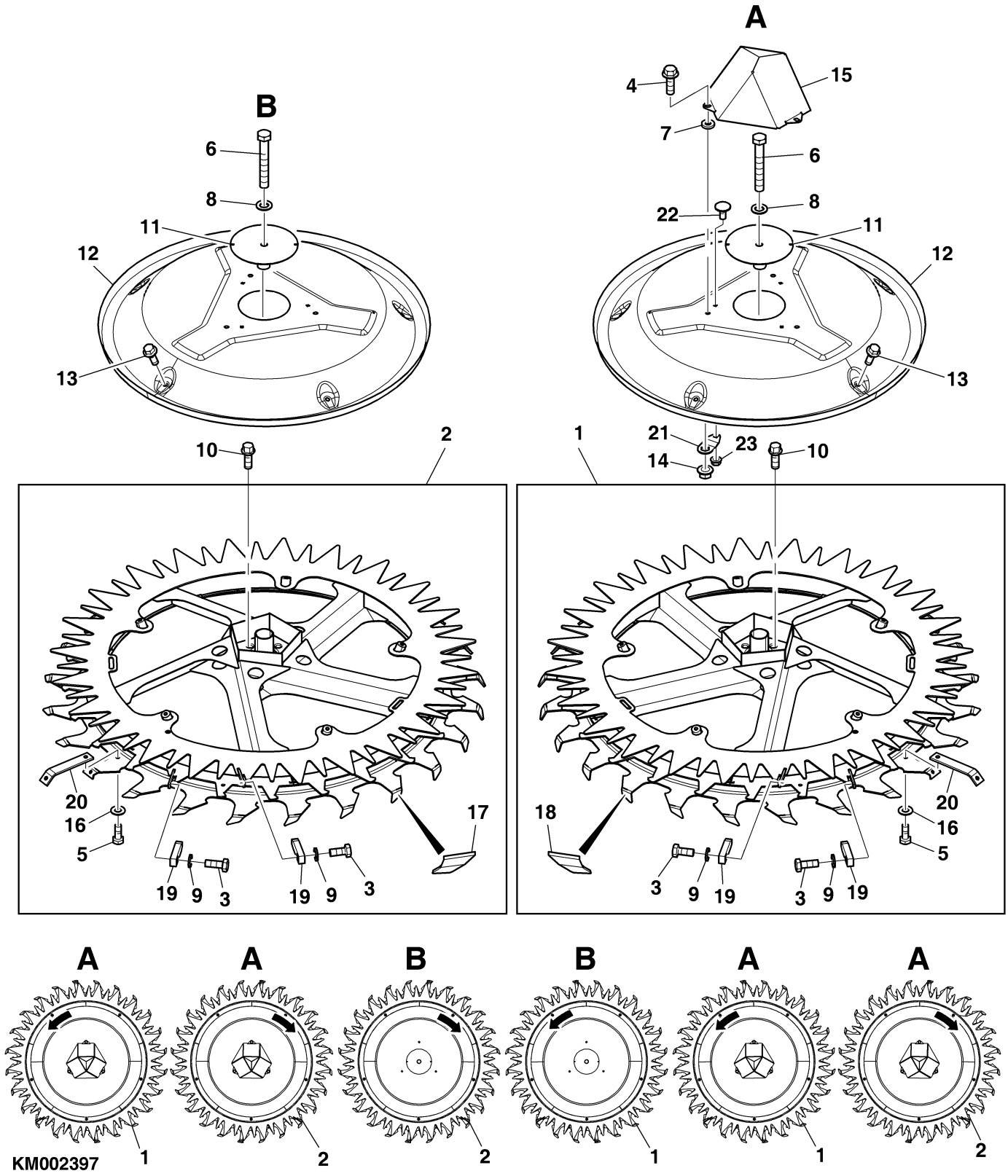
A
B
4
15
7
6
8
22
11
12
13
10
21
23
14
1
2
20
16
5
17
18
19
9
3
A
A
B
B
A
A
1
2
KM002397

FEEDING DRUMS (KM002397)

Item no.	Article no.	Description	Quantity	remarks
1	135943	FEED DRUM	3	
2	135944	FEED DRUM	3	
3	19M10030	CAP SCREW	12	M8x18
4	19M9570	CAP SCREW	12	M12x25
5	19M9680	CAP SCREW	12	M8x12
6	19M9950	CAP SCREW	6	M20x140
7	24M7478	WASHER	12	
8	24M7500	WASHER	6	
9	LCA129294	WASHER	12	
10	LCA130145	WHEEL BOLT	48	
11	LCA130708	Drum cover	6	
12	135932	Drum cover	6	
13	19M9704	BOLT	30	M10x25
14	14M7299	Flange Nut	12	M12
15	135390	BRACKET	4	
16	LCA84221	LOCK WASHER	12	
17	LCA90654	TOOTH	AR	(A)
18	LCA90655	TOOTH	AR	(B)
19	LCA92911	ROTATING SCRAPER	12	
20	LCA95370	ROTATING SCRAPER	12	
21	LCA135941	SHEET	12	
22	LCA69947	BOLT	12	
23	14M7298	Flange Nut	12	M8
		(A) Clockwise Rotating		
		(B) Counterclockwise Rotating		

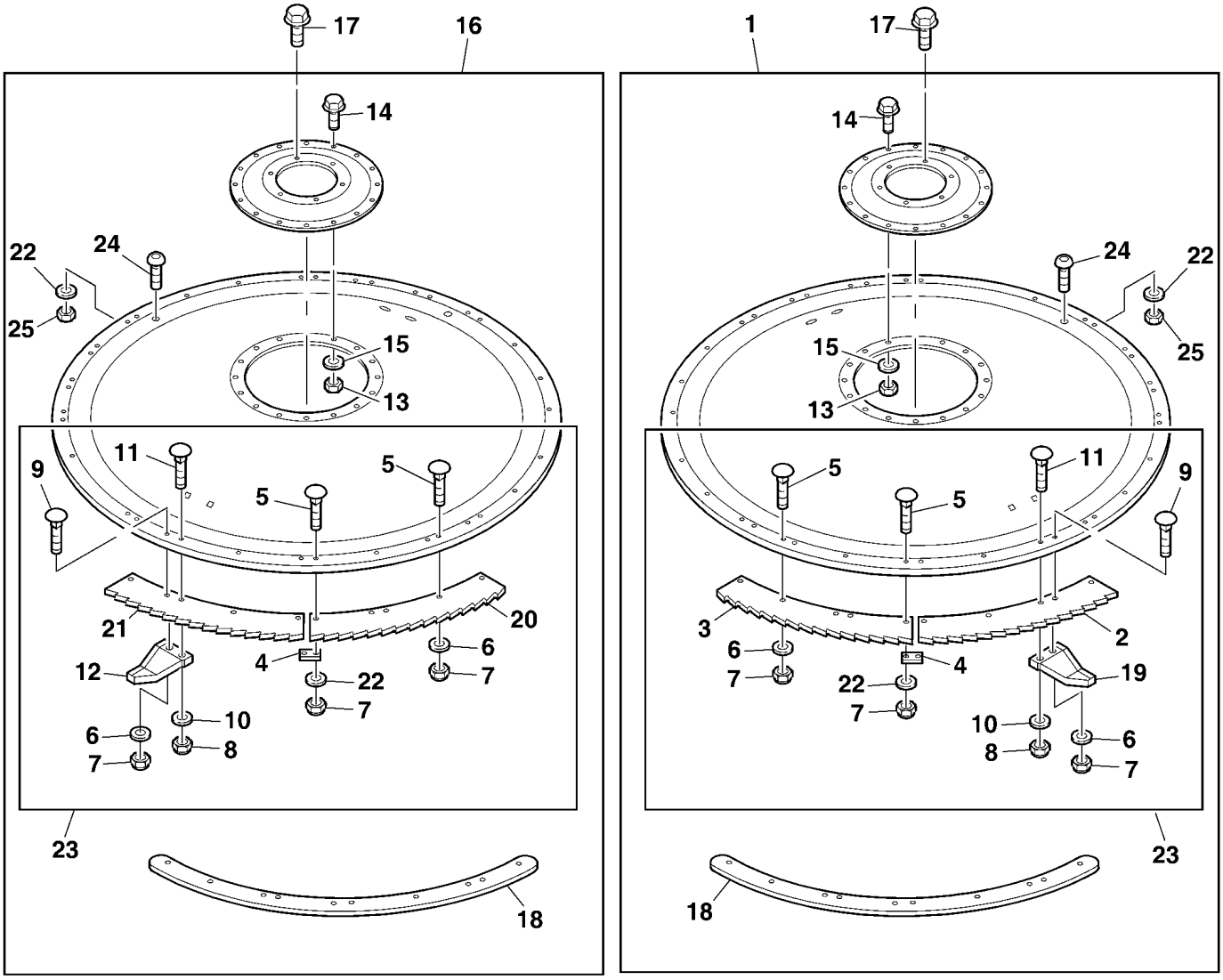

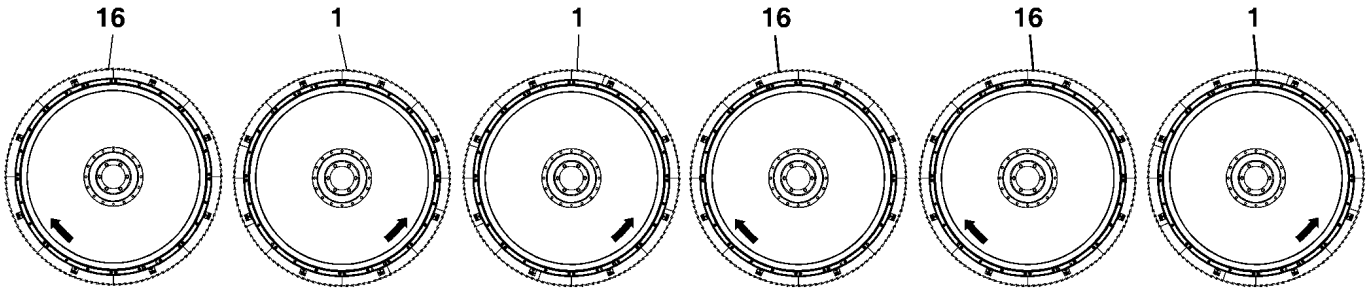

KM002458

BLADE ROTORS (KM002458)

Item no.	Article no.	Description	Quantity	remarks
1	LCA130763	ROTOR	2	(A)
1	LCA130765	ROTOR	2	(A) Heavy Duty
2	LCA78239	KNIFE	12	(A) TK = 2,5 mm
2	LCA129957	KNIFE	12	(A) TK = 2,5MM Heavy Duty
3	LCA78237	KNIFE	12	(A) TK = 3,5 mm
3	LCA129955	KNIFE	12	(A) TK = 3,5MM Heavy Duty
4	LCA88009	STRAP	24	
5	03M7184	BOLT	AR	M8x20
6	LCA84221	LOCK WASHER	AR	
7	14M7659	NUT	AR	M8
8	14M7610	NUT	AR	M10
9	03M7185	BOLT	AR	M8x25
10	LCA71878	LOCK WASHER	6	
11	LCA106698	BOLT	AR	
12	LCA67156	ROTATING SCRAPER	6	
13	14M7685	NUT	AR	M8
14	19M9683	CAP SCREW	AR	M8x25
15	24M7482	WASHER	AR	
16	LCA130762	ROTOR	2	(A)
16	LCA130764	ROTOR	2	(A) Heavy Duty
17	LCA121160	BOLT	36	
18	LCA97894	REINFORCEMENT	12	
19	LCA67157	ROTATING SCRAPER	6	
20	LCA78236	KNIFE	12	(A) TK = 3,5 mm
20	LCA129954	KNIFE	12	(A) TK = 3,5MM Heavy Duty
21	LCA78238	KNIFE	12	(A) TK = 2,5 mm
21	LCA129956	KNIFE	12	(A) TK = 2,5MM Heavy Duty
22	LCA84221	LOCK WASHER	AR	
23	LCA142205	KIT	1	(A) (C)
23	LCA142206	KIT	1	(A) (C) Heavy Duty
24	21M7536	SCREW	AR	M8x16
24	21M7572	SCREW	AR	M8x20
25	14M7659	NUT	AR	M8

(A) coated

(A) coated (C) One service kit is for two gatherer drums

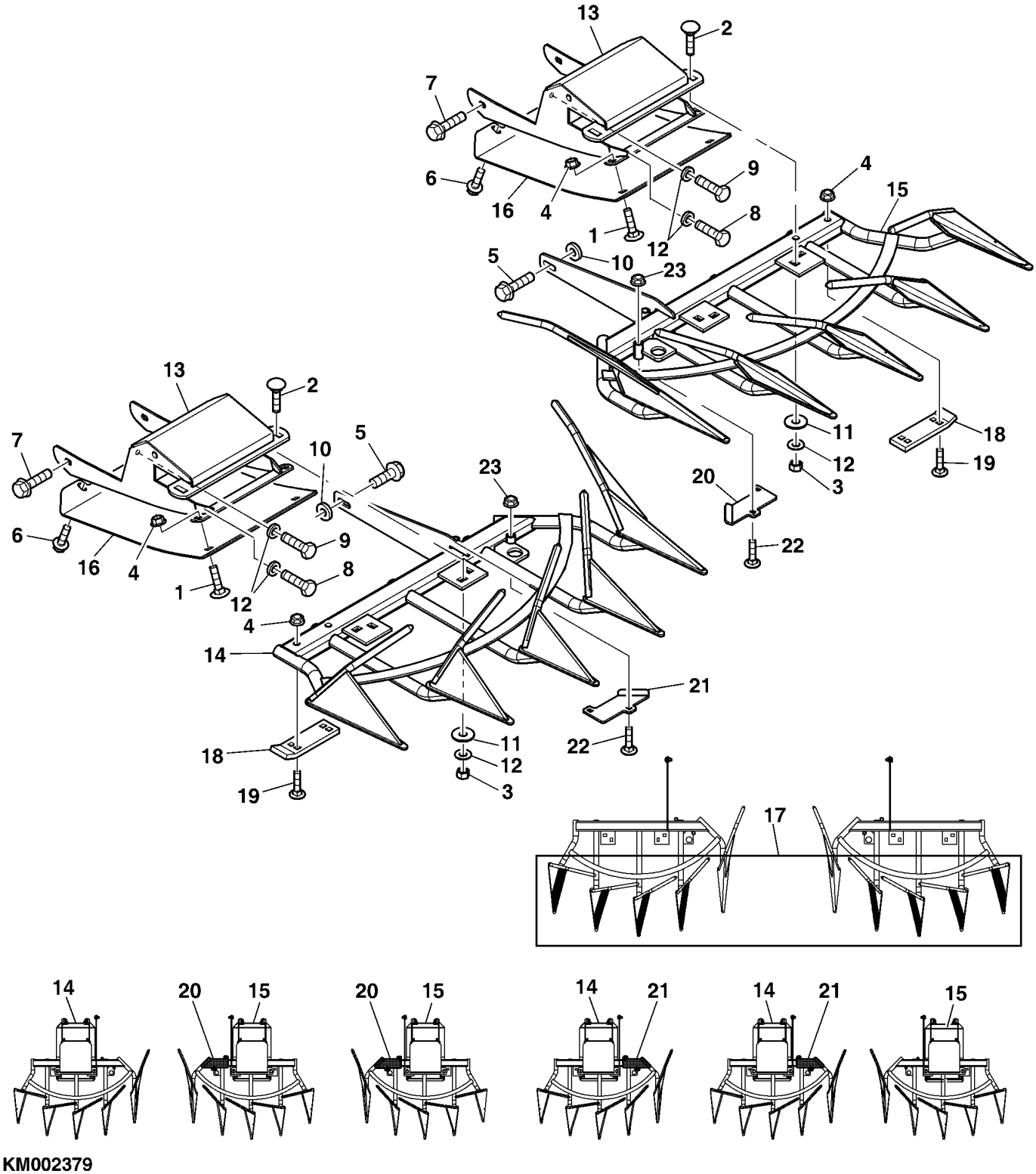
13
2
7
6
16
4
9
4
15
1
12
8
5
10
23
11
12
3
18
19
20
22
13
2
7
10
5
23
6
16
4
9
8
1
12
4
14
21
18
19
11
12
3
22
17
14
20
15
20
15
14
21
14
21
15

KM002379

Separator tips – sliding shoes (KM002379)

Item no.	Article no.	Description	Quantity	remarks
1	03M7405	BOLT	12	M10x25
2	03M7408	BOLT	12	M12x35
3	14M7662	NUT	12	M12
4	14M7296	Flange Nut	24	M10
5	19M7790	CAP SCREW	6	M12x35
6	19M7784	CAP SCREW	12	M10x20
7	19M9570	CAP SCREW	12	M12x25
8	19M9649	CAP SCREW	12	M12x35
9	19M9651	CAP SCREW	12	M12x50
10	24M7478	WASHER	6	
11	24M7493	WASHER	12	
12	LCA72740	LOCK WASHER	36	
13	LCA128283	BRACKET	6	
14	128947	GATHERER POINT	3	Info LCA131106
15	128948	GATHERER POINT	3	Info LCA131106
16	LCA110020	SKID PLATE	6	Standard
16	LCA129671	SKID PLATE	6	Heavy Duty
17	LCA129302	KIT	3	(A)
18	LCA128880	SHEET	6	
19	03M7233	BOLT	12	M10x70
20	LCA128884	SHEET	2	
21	LCA128883	SHEET	2	
22	03M7423	BOLT	8	M12x75
23	14M7299	Flange Nut	8	M12
		(A) One service kit is for two gatherer drums		

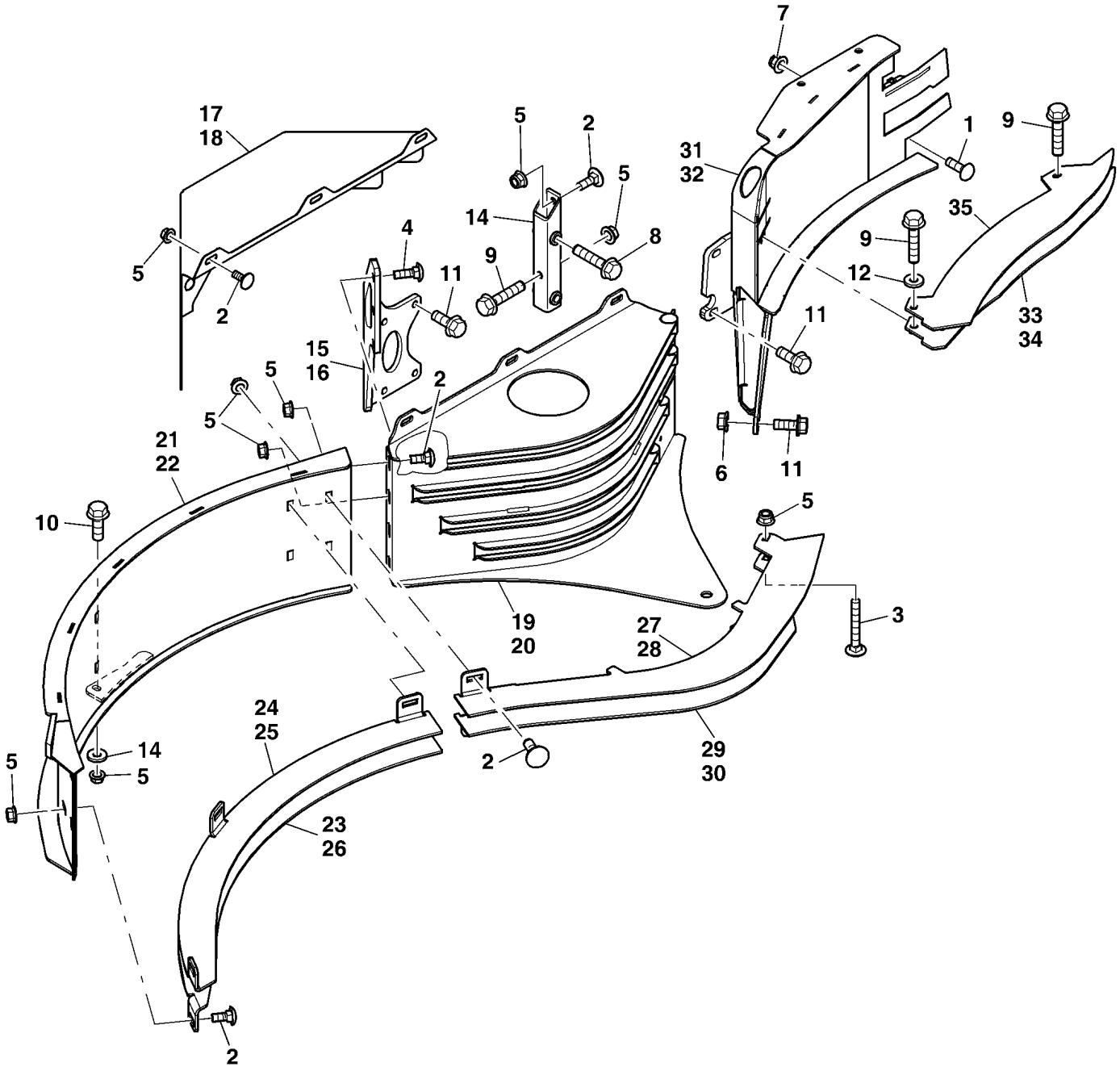
7
17
18
5
2
5
1
9
31
32
14
8
35
4
9
9
11
12
5
2
11
33
34
15
16
5
2
5
21
22
6
11
10
5
19
20
27
28
3
24
25
14
5
5
2
29
30
23
26
2

KM002390

Rear wall (KM002390)

Item no.	Article no.	Description	Quantity	remarks
1	03M7397	BOLT	2	M12x35
2	03M7405	BOLT	28	M10x25
3	03M7451	BOLT	2	M10x60
4	03M7472	BOLT	6	M10x30
5	14M7296	Flange Nut	40	M10
6	14M7299	Flange Nut	2	M12
7	14M7401	Flange Nut	2	M12
8	19M10432	SCREW	4	M12x65
9	19M7807	CAP SCREW	6	M10x60
10	19M7835	CAP SCREW	2	M10x35
11	19M9571	Cap Screw	2	M12x30
12	24M7477	WASHER	2	
13	24M7491	WASHER	4	
14	LCA130521	BRACKET	2	
15	LCA133638	SHEET	1	LH
16	LCA133639	SHEET	1	RH
17	LCA130661	SHEET	1	LH
18	LCA130662	SHEET	1	RH
19	LCA138080	STRIPPER	1	LH
20	LCA138081	STRIPPER	1	RH
21	LCA138150	BRACKET	1	LH
22	LCA138151	BRACKET	1	RH
23	LCA138649	SHEET	1	LH
24	LCA138650	SHEET	1	RH
25	LCA138651	SHEET	1	LH
26	LCA138652	SHEET	1	RH
27	LCA138645	SHEET	1	LH
28	LCA138646	SHEET	1	RH
29	LCA135731	SHEET	1	LH
30	LCA135732	SHEET	1	RH
31	LCA138070	BRACKET	1	LH
32	LCA138071	BRACKET	1	RH
33	LCA135738	BRACKET	1	LH
34	LCA135739	BRACKET	1	RH
35	LCA135804	SHEET	2	

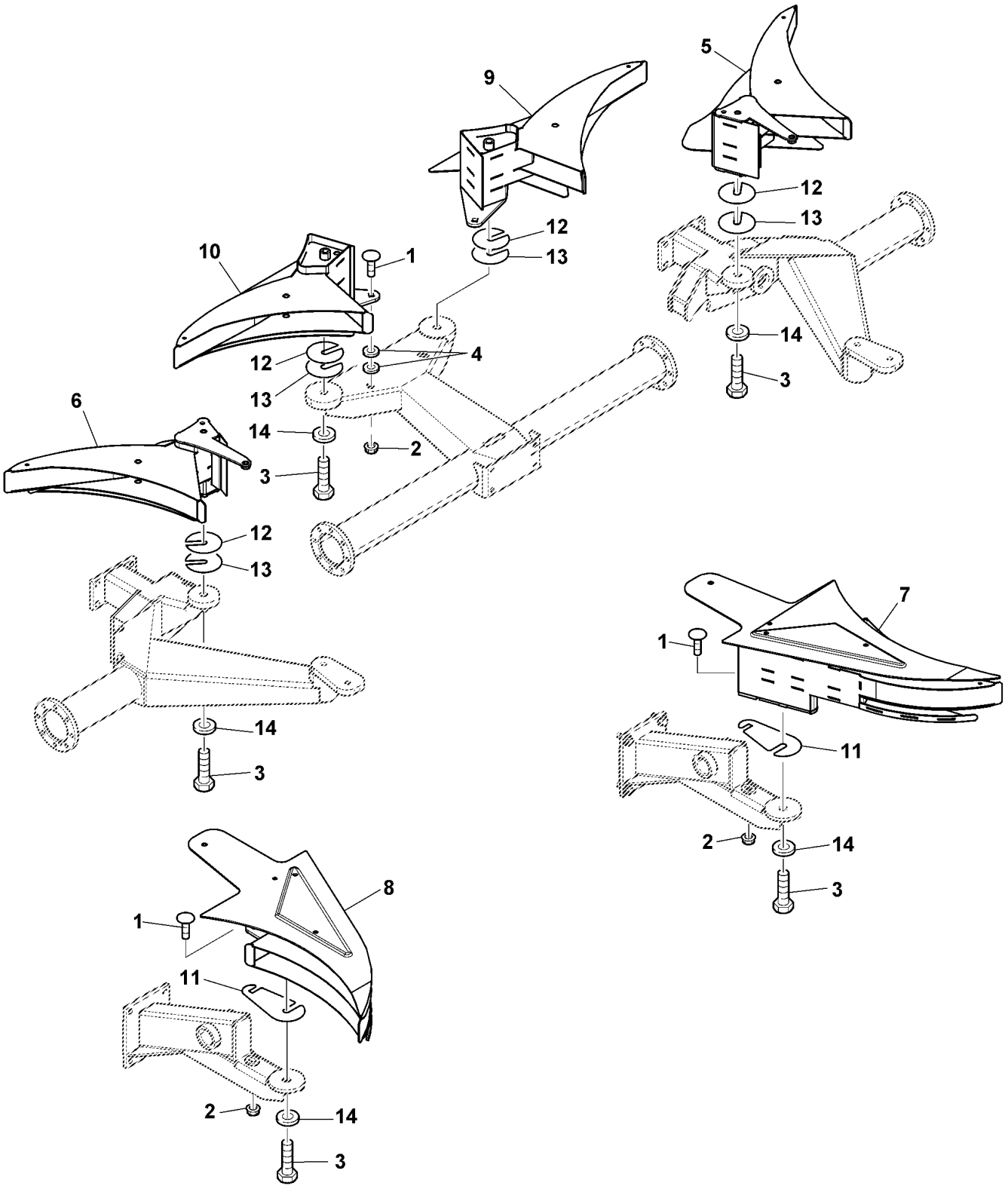

KM002385

STRIPPER (KM002385)

Item no.	Article no.	Description	Quantity	remarks
1	03M7409	BOLT	4	M12x40
2	14M7299	Flange Nut	4	M12
3	19M9693	CAP SCREW	6	M16x60
4	24M7491	WASHER	4	
5	LCA137815	STRIPPER	1	LH
6	LCA137816	STRIPPER	1	RH
7	LCA137831		1	
8	LCA137832		1	
9	LCA136106	STRIPPER	1	
10	LCA136107	STRIPPER	1	
11	LCA125996	SHEET	2	TK = 1,0 mm
11	LCA137807	SHEET	2	TK = 0,5 mm
12	LCA133620	WASHER	8	TK = 0,5 mm
13	LCA133621	WASHER	8	TK = 1,5 mm
14	LCA89595	LOCK WASHER	6	

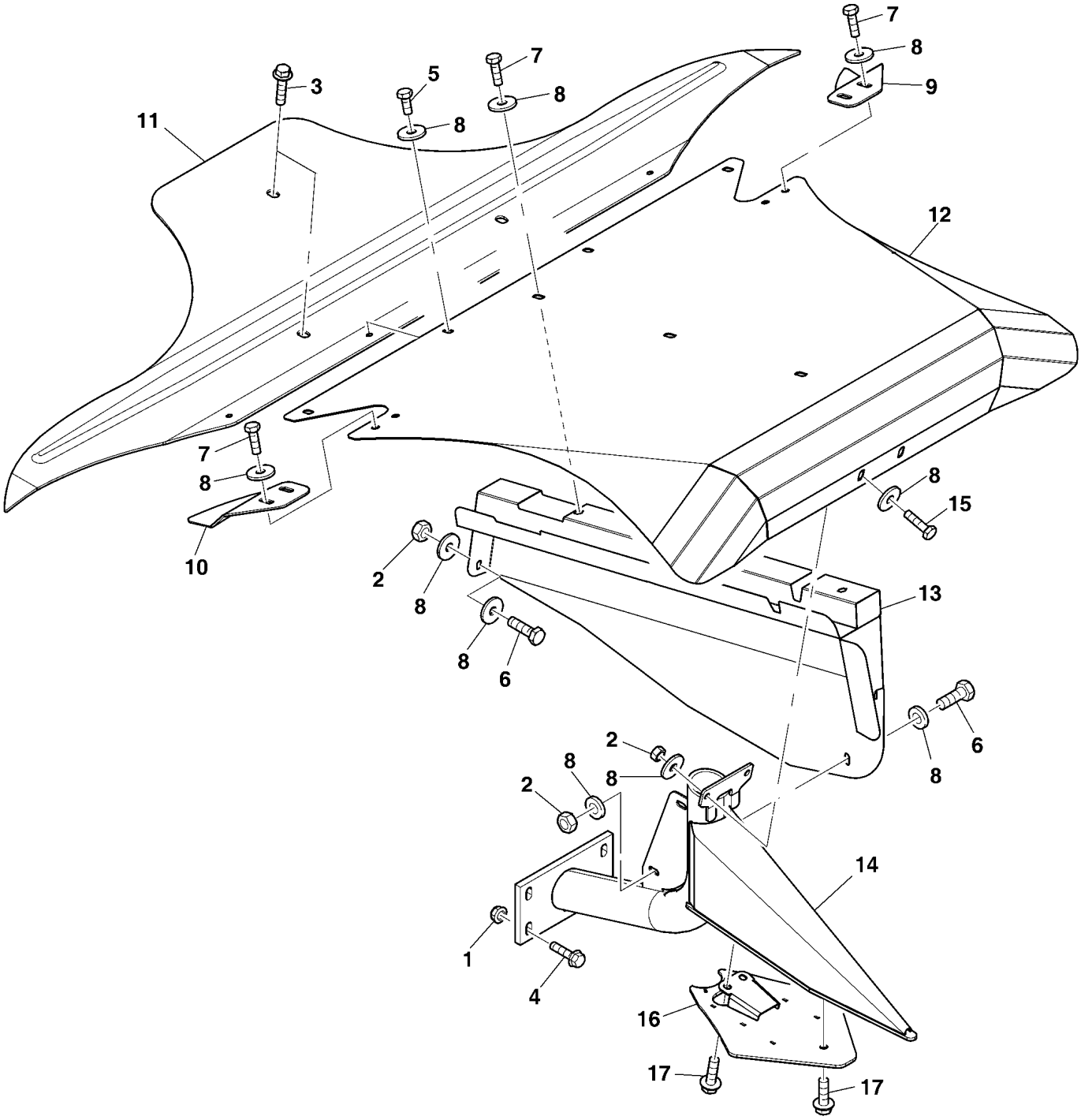

KM002398

Centre table (KM002398)

Item no.	Article no.	Description	Quantity	remarks
1	14M7296	Flange Nut	4	M10
2	14M7624	NUT	5	M8
3	19M10686	CAP SCREW	3	M12x50
4	19M7786	CAP SCREW	4	M10x30
5	19M9680	CAP SCREW	4	M8x12
6	19M9682	CAP SCREW	5	M8x20
7	19M9683	CAP SCREW	7	M8x25
8	24M7482	WASHER	21	
9	LCA134362	SHEET	1	
10	LCA134363	SHEET	1	
11	135323	STRIPPER	1	
12	134359	COVER	1	
13	LCA134355	COVER	1	
14	146582	GATHERER POINT	1	
15	19M9684	CAP SCREW	2	M8x30
16	LCA128025	GUIDE	1	
17	19M9570	CAP SCREW	3	M12x25

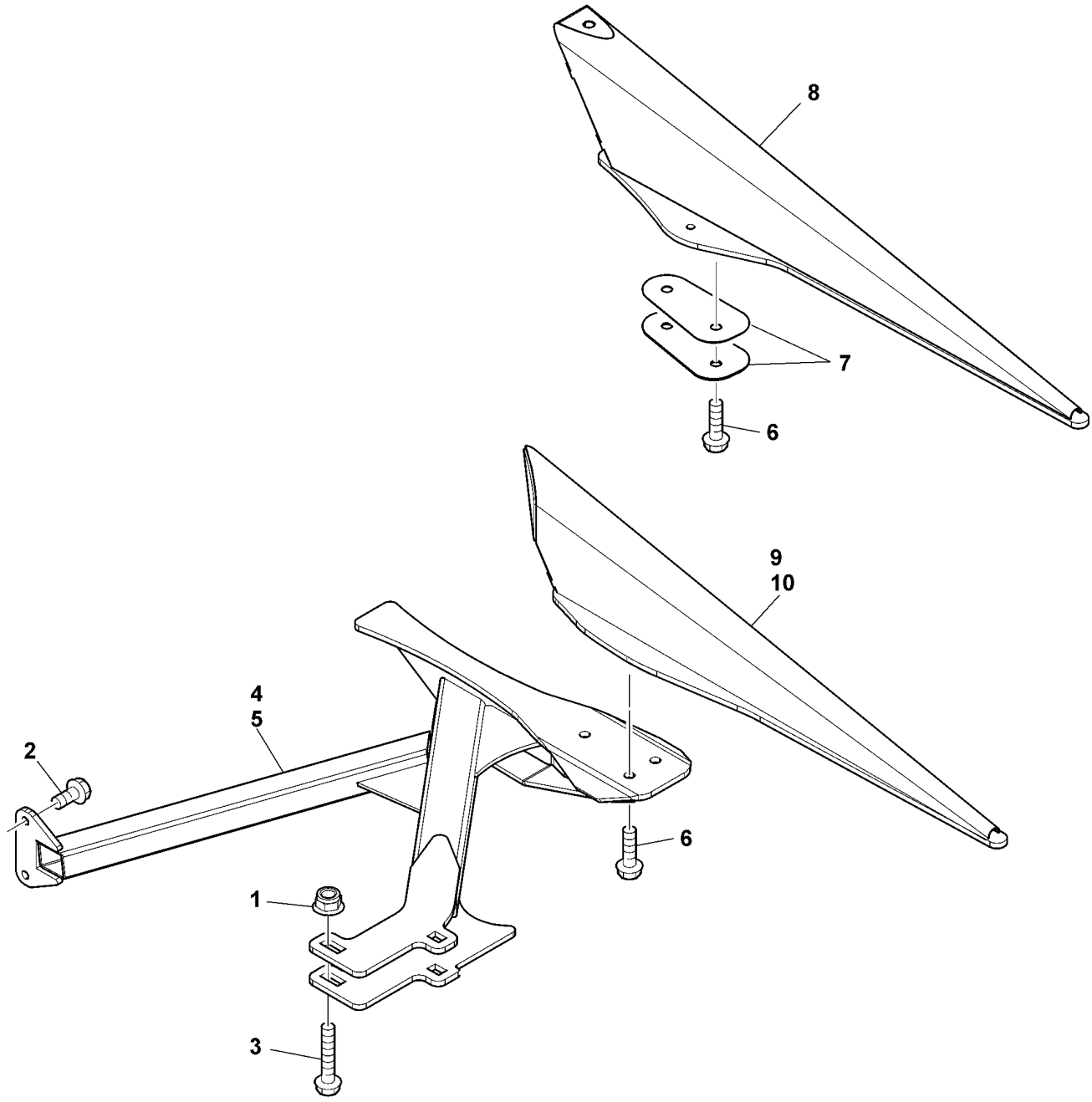

KM002393

SEPERATOR TIPS (KM002393)

Item no.	Article no.	Description	Quantity	remarks
1	14M7401	Flange Nut	4	M12
2	19M9698	CAP SCREW	4	M10x25
3	19M10296	CAP SCREW	4	M12x80
4	LCA135984	GATHERER POINT	12	
5	LCA135985	GATHERER POINT	2	
6	19M9572	CAP SCREW	1	M12x40
7	LCA107874	SHEET	2	
8	137785	GATHERER POINT	2	
9	137788	GATHERER POINT	1	LH
10	137789	GATHERER POINT	1	RH

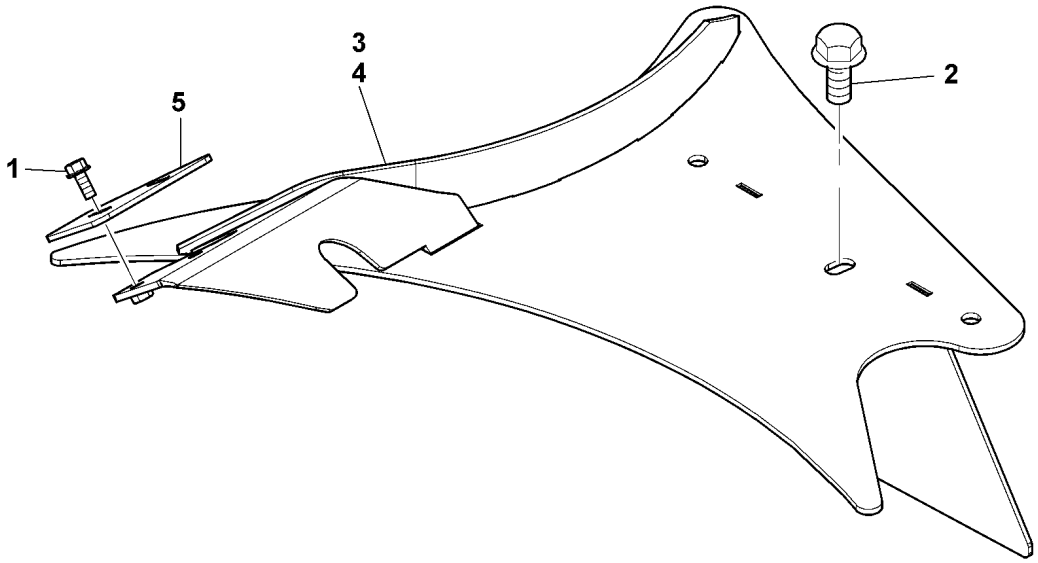

KM002386

COVERS (KM002386)

Item no.	Article no.	Description	Quantity	remarks
1	19M9261	CAP SCREW	4	M8x20
2	19M9570	CAP SCREW	4	M12x25
3	137821	STRIPPER	1	LH
4	137822	STRIPPER	1	RH
5	LCA130735	SHEET	2	

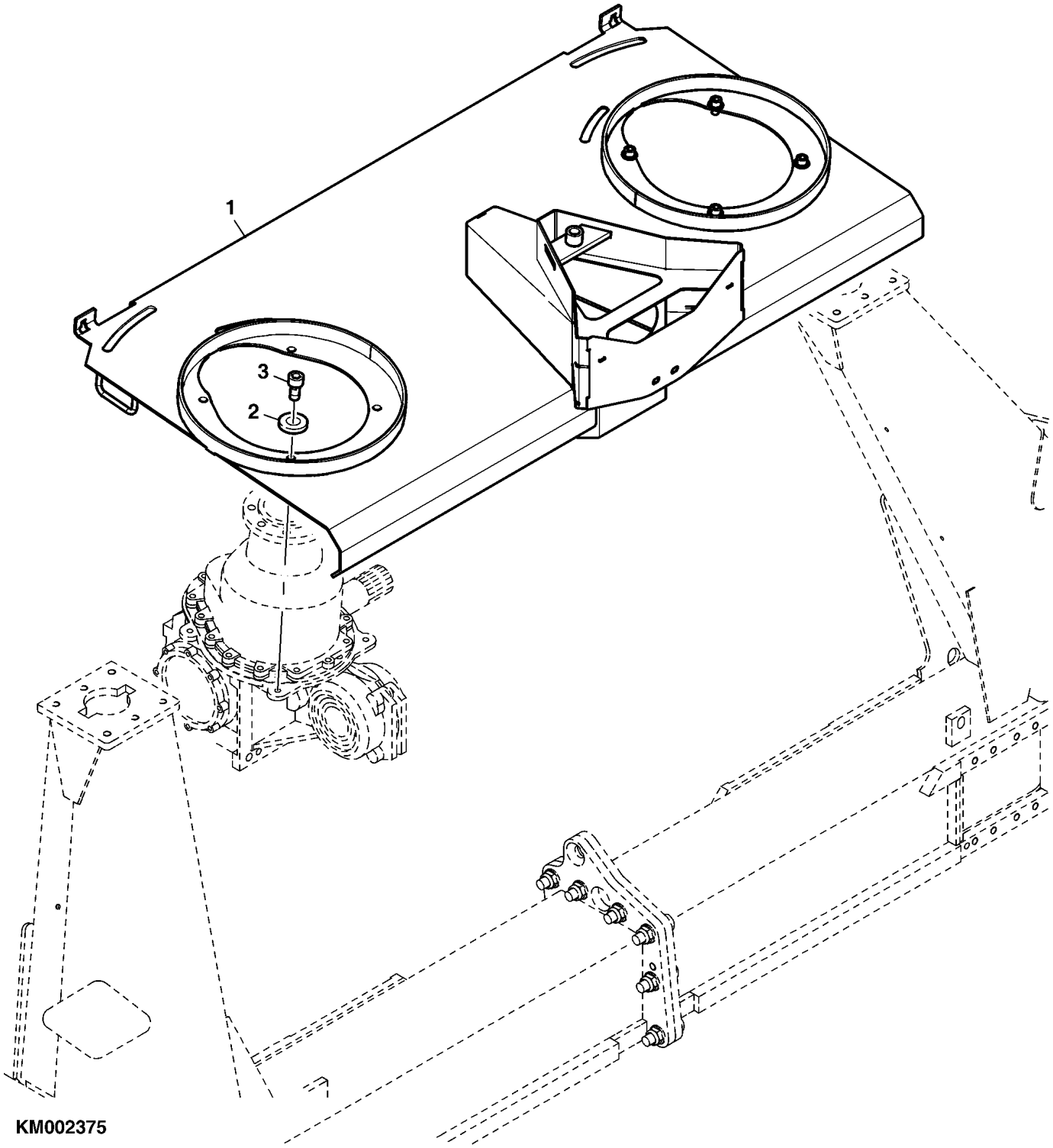

KM002375

BOTTOM (KM002375)

Item no.	Article no.	Description	Quantity	remarks
1	138301	BOTTOM	1	
2	LCA71878	LOCK WASHER	8	
3	19M10047	SCREW	8	M10x16

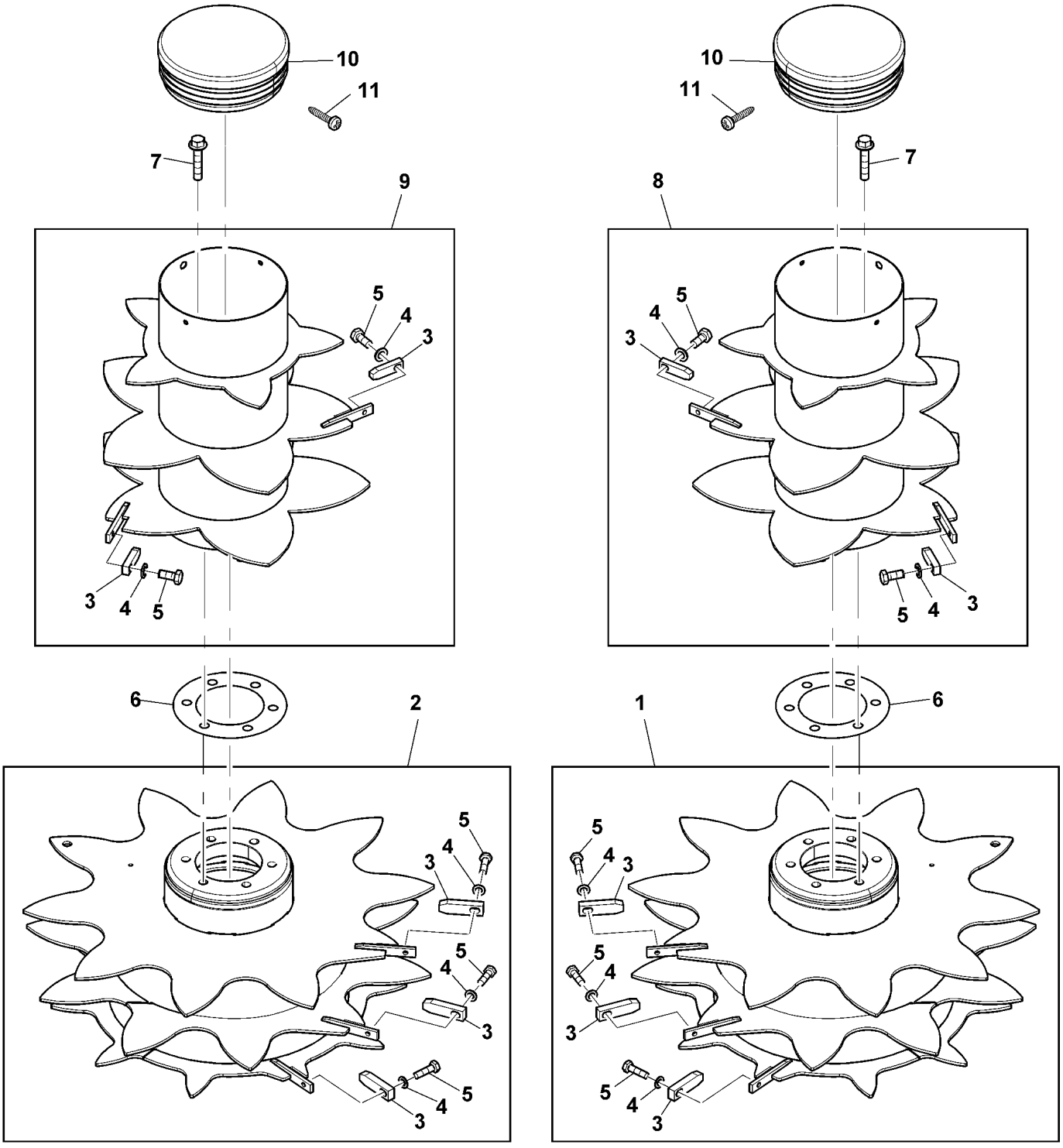

KM002391

DRUM (KM002391)

Item no.	Article no.	Description	Quantity	remarks
1	136270	DRUM	1	LH Standard
1	138130	DRUM	1	LH Heavy Duty
2	136271	DRUM	1	RH Standard
2	138131	DRUM	1	RH Heavy Duty
3	LCA92911	ROTATING SCRAPER	10	Standard
3	LCA138129	ROTATING SCRAPER	10	Heavy Duty
4	LCA129294	WASHER	10	
5	19M10030	CAP SCREW	10	M8x18
6	LCA96357	SHIM	AR	
7	19M10082	CAP SCREW	12	M12x60
8	135830	DRUM	1	LH Standard
8	138124	DRUM	1	LH Heavy Duty
9	135831	DRUM	1	RH Standard
9	138125	DRUM	1	RH Heavy Duty
10	LCA95500	SCREW	4	
11	LCA96282	PLUG	2	

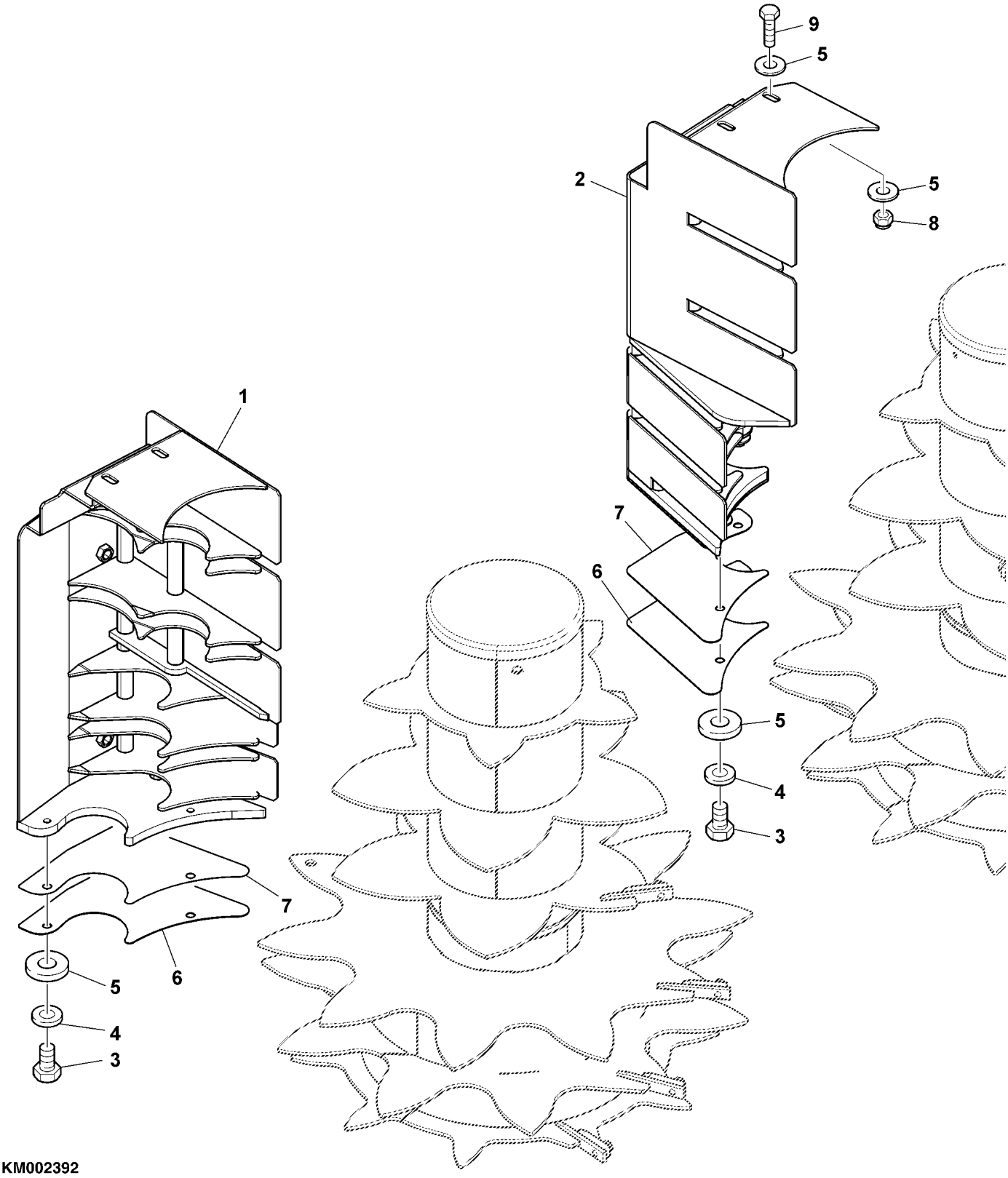

KM002392

Wiper – conveyor drums (KM002392)

Item no.	Article no.	Description	Quantity	remarks
1	125660	STRIPPER	1	RH
2	125659	STRIPPER	1	LH
3	19M9638	CAP SCREW	4	M10x20
4	LCA71878	LOCK WASHER	4	
5	24M7489	WASHER	4	
6	LCA96358	SHIM	AR	TK = 0,5 mm
7	LCA96359	SHIM	AR	TK = 1,5 mm
8	14M7660	NUT	4	M10
9	19M9640	CAP SCREW	4	M10x30

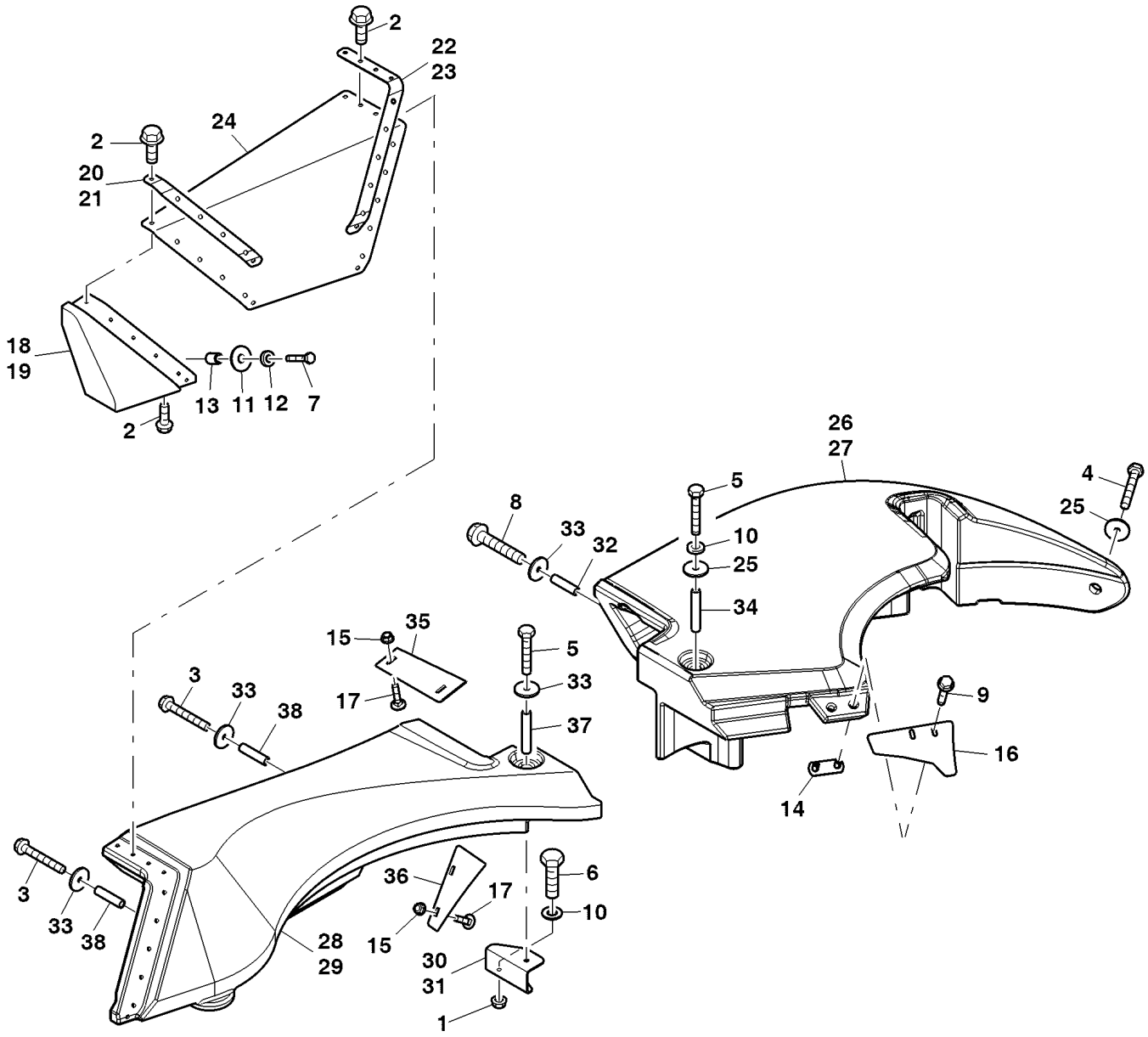
2
22
23
24
2
20
21
18
19
13
11
12
7
2
26
27
5
4
25
8
33
32
10
25
34
15
35
5
3
33
17
33
38
37
9
16
14
3
36
6
17
10
33
38
28
29
15
30
31
1

KM002737

Protective shield (KM002737)

Item no.	Article no.	Description	Quantity	remarks
1	14M7400	NUT	4	M10
2	19M9261	CAP SCREW	38	M8x20
3	19M7836	CAP SCREW	4	M10x110
4	19M8162	CAP SCREW	2	M10x30
5	19M8899	CAP SCREW	2	M10x160
6	19M9641	CAP SCREW	4	M10x35
7	19M9687	CAP SCREW	4	M8x45
8	19M7807	CAP SCREW	2	M10x85
9	19M10261	CAP SCREW	4	M10x25
10	24M7488	WASHER	14	
11	24M7493	WASHER	4	
12	LCA84221	LOCK WASHER	4	
13	LCA123180	BUSHING	4	
14	LCA98193	RETAINER	2	
15	14M7298	Flange Nut	8	M8
16	LCA136303	SHEET	2	
17	03M7404	BOLT	8	
18	107825	SHIELD	1	LH
19	107826	SHIELD	1	RH
20	LCA123926	SHEET	1	LH
21	LCA123927	SHEET	1	RH
22	LCA123928	SHEET	1	LH
23	LCA123929	SHEET	1	RH
24	LCA107840	LIMIT CURTAIN	2	
25	LCA107842	WASHER	4	
26	135559	COVER	1	LH
27	135560	COVER	1	RH
28	136411	COVER	1	LH
29	136412	COVER	1	RH
30	LCA118032	RETAINER	1	LH
31	LCA118033	RETAINER	1	RH
32	LCA98335	SPACER	2	
33	LCA136508	WASHER	8	
34	LCA136506	TUBE	4	
35	LCA121818	SHEET	2	
36	LCA121819	SHEET	2	

Protective shield (KM002737)

Item no.	Article no.	Description	Quantity	remarks
37	LCA118477	TUBE	2	
38	LCA118035	TUBE	4	

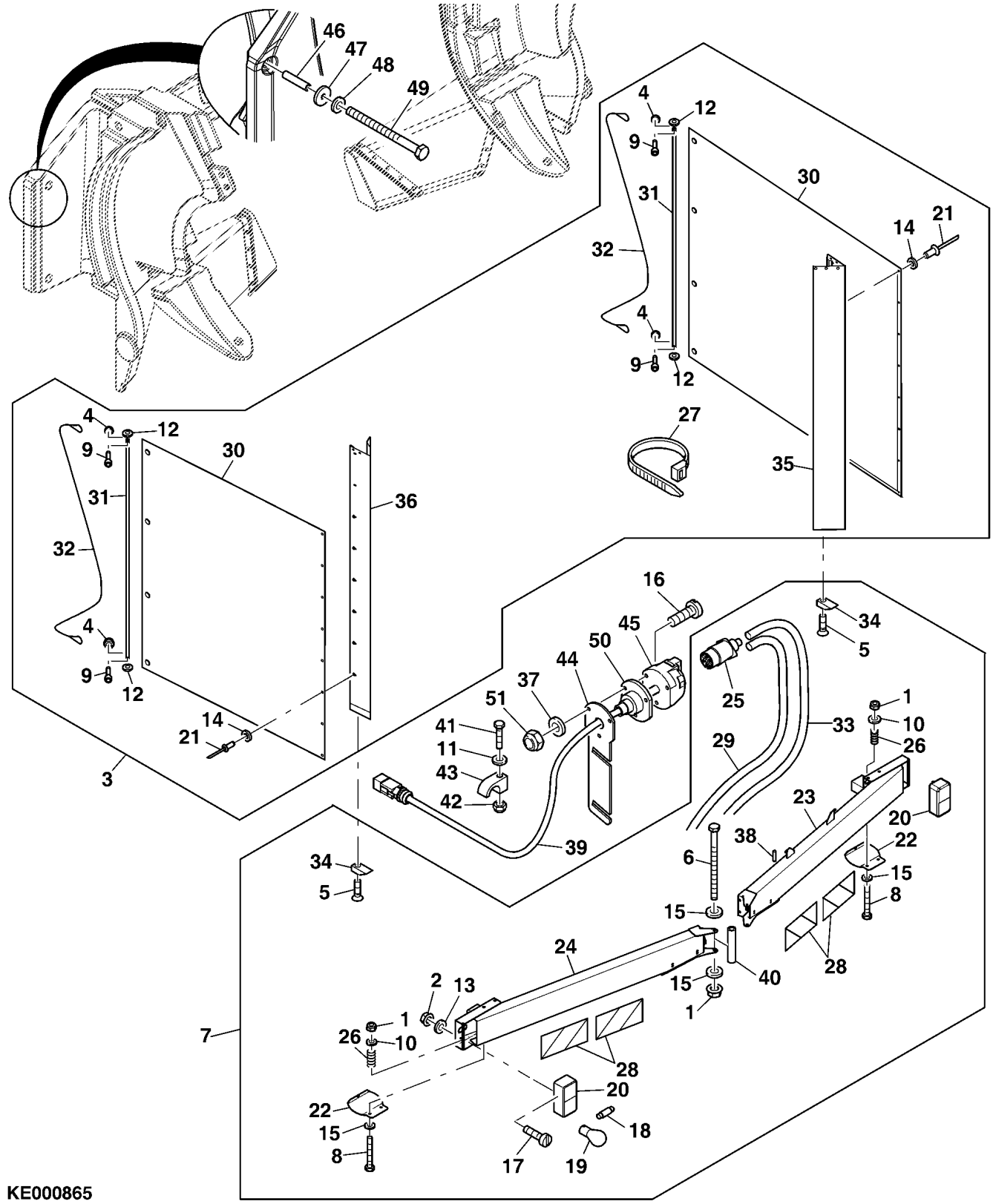
46
47
48
49
4
12
9
30
31
32
14
21
27
35
36
3
16
45
50
44
37
51
41
11
43
42
39
34
5
25
33
29
1
10
26
23
20
22
38
6
15
8
24
40
28
2
13
7
17
19
18
KE000865

Accident Protection (KE000865)

Item no.	Article no.	Description	Quantity	remarks
1	14M7659	NUT	3	M8
2	14M7671	NUT	4	M4
3	LCA133092	GUARD	1	
4	14M7668	NUT	4	M6
5	19M10189	SCREW	2	M10x25
6	19M9626	CAP SCREW	1	M8x150
7	LCA133089	GUARD	1	
8	19M9695	CAP SCREW	4	M8x75
9	19M9725	BOLT	4	M6x20
10	24M7482	WASHER	4	
11	24M7506	WASHER	3	
12	24M7493	WASHER	4	
13	24M7501	WASHER	4	
14	24M7503	WASHER	18	
15	24M7036	WASHER	4	
16	21M7617	SCREW	3	M5x35
17	21M7588	SCREW	4	M4x16
18	57M6274	LAMP	2	
19	57M7014	LAMP	2	
20	AZ42982	LAMP	2	
21	LCA03355	RIVET	14	
22	LCA133084	SHEET	2	
23	LCA133085	GUARD	1	LH
24	LCA133086	GUARD	1	RH
25	LCA35363	ELEC. CONNECTOR TERMINAL	1	
26	LCA38598	COMPRESSION SPRING	4	
27	LCA44646	TIE BAND	AR	
28	LCA62402	SAFETY SIGN	2	LH
28	LCA62403	SAFETY SIGN	2	RH
29	LCA135892	CABLE	1	
30	LCA90031	GUARD	2	
31	LCA90032	TUBE	2	
32	LCA90040	ROPE	2	
33	LCA97349	CABLE	1	
34	LCA97784	WEDGE	2	
35	LCA133731	GUARD	1	LH

Item no.	Article no.	Description	Quantity	remarks
36	LCA133732	GUARD	1	RH
37	24M7502	WASHER	3	
38	LCA98386	GUARD	2	
39	LCA115776	WIRING HARNESS	1	Incl. Key 16,37,45,50,51
40	LCA106751	BUSHING	1	
41	19M9677	CAP SCREW	2	M6x25
41	19M10112	CAP SCREW	1	M6x35
42	14M7397	NUT	1	M6
43	Z34952	BLOCK CLAMP	3	
44	LCA119828	SHEET	1	
45	LCA29875	ELEC. CONNECTOR TERMINAL	1	
46	LCA98335	SPACER	2	
47	LCA107842	WASHER	2	
48	24M7488	WASHER	2	
49	19M9581	CAP SCREW	2	M10x140
50	LCA83378	GUARD	1	
51	14M7663	NUT	3	M5

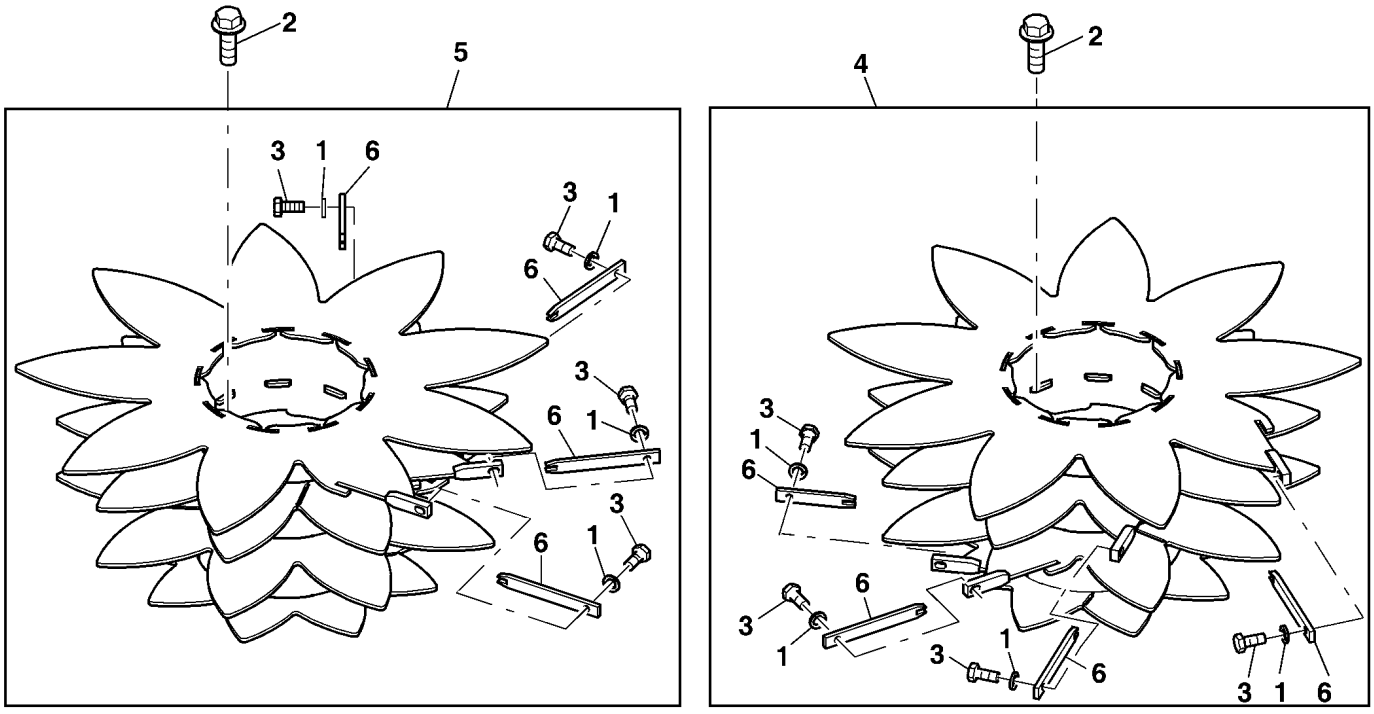

KM002389

Transverse transport drum (KM002389)

Item no.	Article no.	Description	Quantity	remarks
1	LCA129294	WASHER	8	
2	19M9570	CAP SCREW	12	M12x25
3	19M10030	CAP SCREW	8	M8x18
4	137952	DRUM	1	LH
5	137953	DRUM	1	RH
6	LCA92911	ROTATING SCRAPER	8	

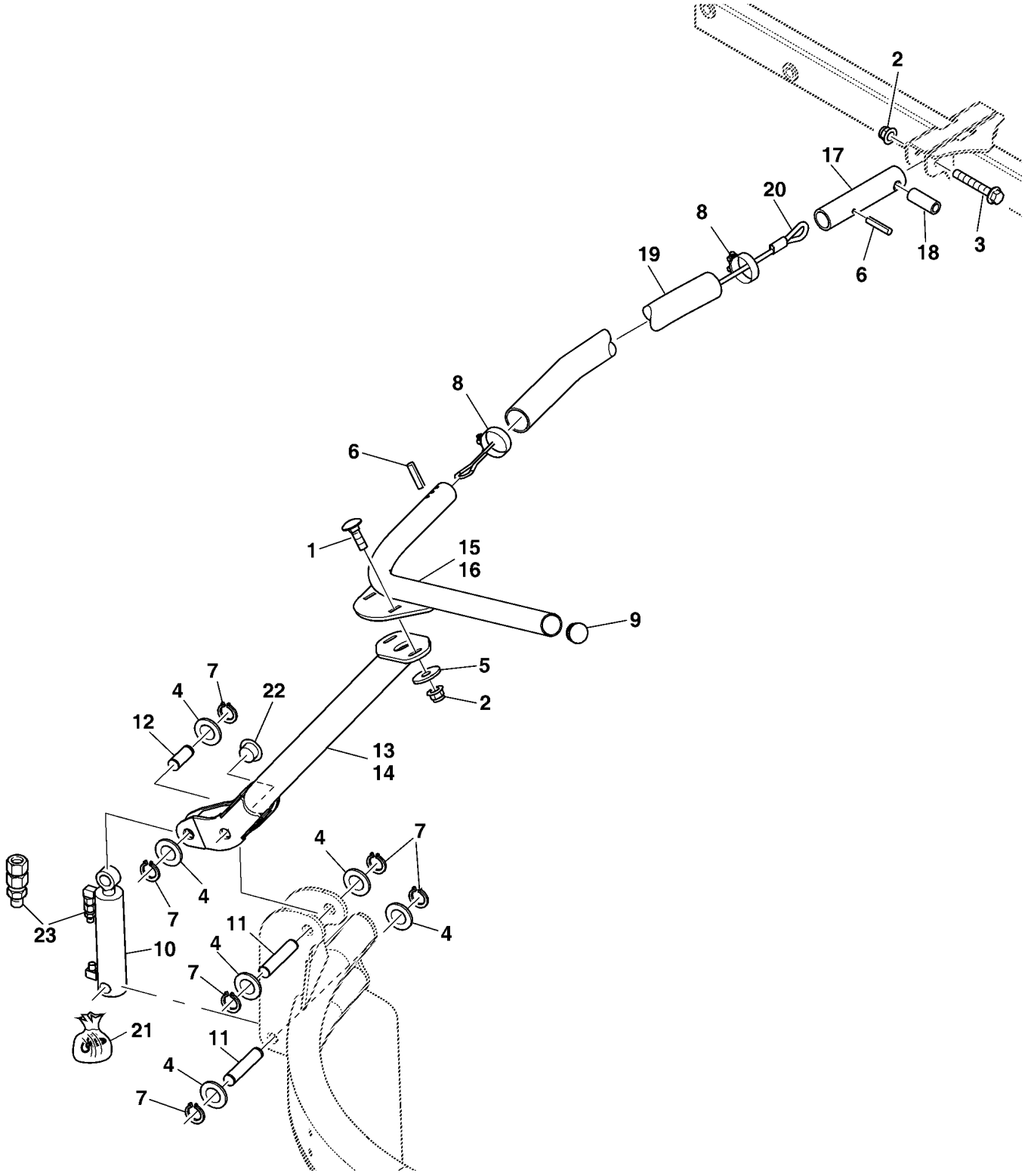
2
17
20
8
19
18
3
6
8
6
1
15
16
9
5
2
7
4
22
12
13
14
4
7
4
7
23
11
10
4
7
21
11
4
7

KM002346

FEED BAR (KM002346)

Item no.	Article no.	Description	Quantity	remarks
1	03M7409	BOLT	4	M12x40
2	14M7401	Flange Nut	6	M12
3	19M10296	CAP SCREW	2	M12x80
4	24M7540	WASHER	12	
5	24M7484	WASHER	4	
6	34M7312	SPRING PIN	4	
7	40M7366	SNAP RING	12	
8	LCA95162	CLAMP	4	
9	LCA98776	PLUG	2	
10	LCA121245	HYDRAULIC CYLINDER	2	
11	LCA113147	PIN FASTENER	4	
12	LCA113148	PIN FASTENER	2	
13	LCA121224	BAIL	1	LH
14	LCA121225	BAIL	1	RH
15	136381	BAIL	1	LH
16	136382	BAIL	1	RH
17	LCA121229	TUBE	2	
18	LCA114796	TUBE	2	
19	LCA133492	HOSE	2	
20	LCA114801	ROPE	2	
21	LCA114024	GASKET KIT	2	FOR LCA121245
22	LCA32985	FITTING PLUG	2	
23	LCA122534	RESTRICTOR	2	

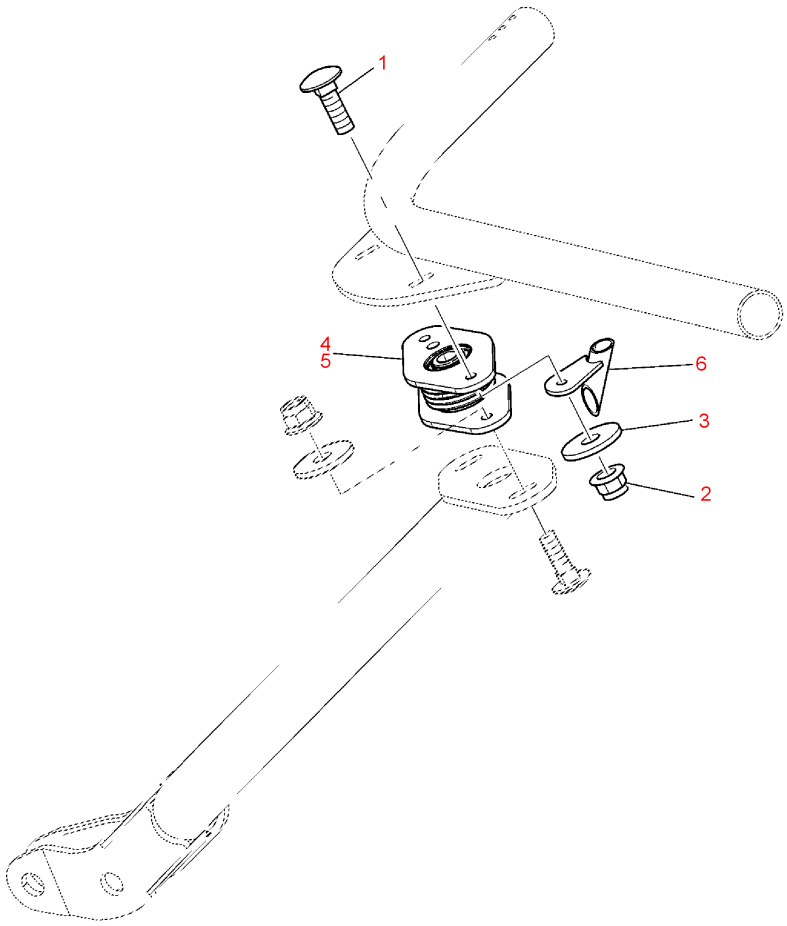

KM001795

FULCRUM (KM001795)

Item no.	Article no.	Description	Quantity	remarks
1	03M7426	SCREW	4	M12x45
2	14M7401	Flange Nut	4	M12
3	24M7484	WASHER	4	
4	LCA118327	FULCRUM	1	LH
5	LCA118328	FULCRUM	1	RH
6	LCA121251	BRACKET	2	

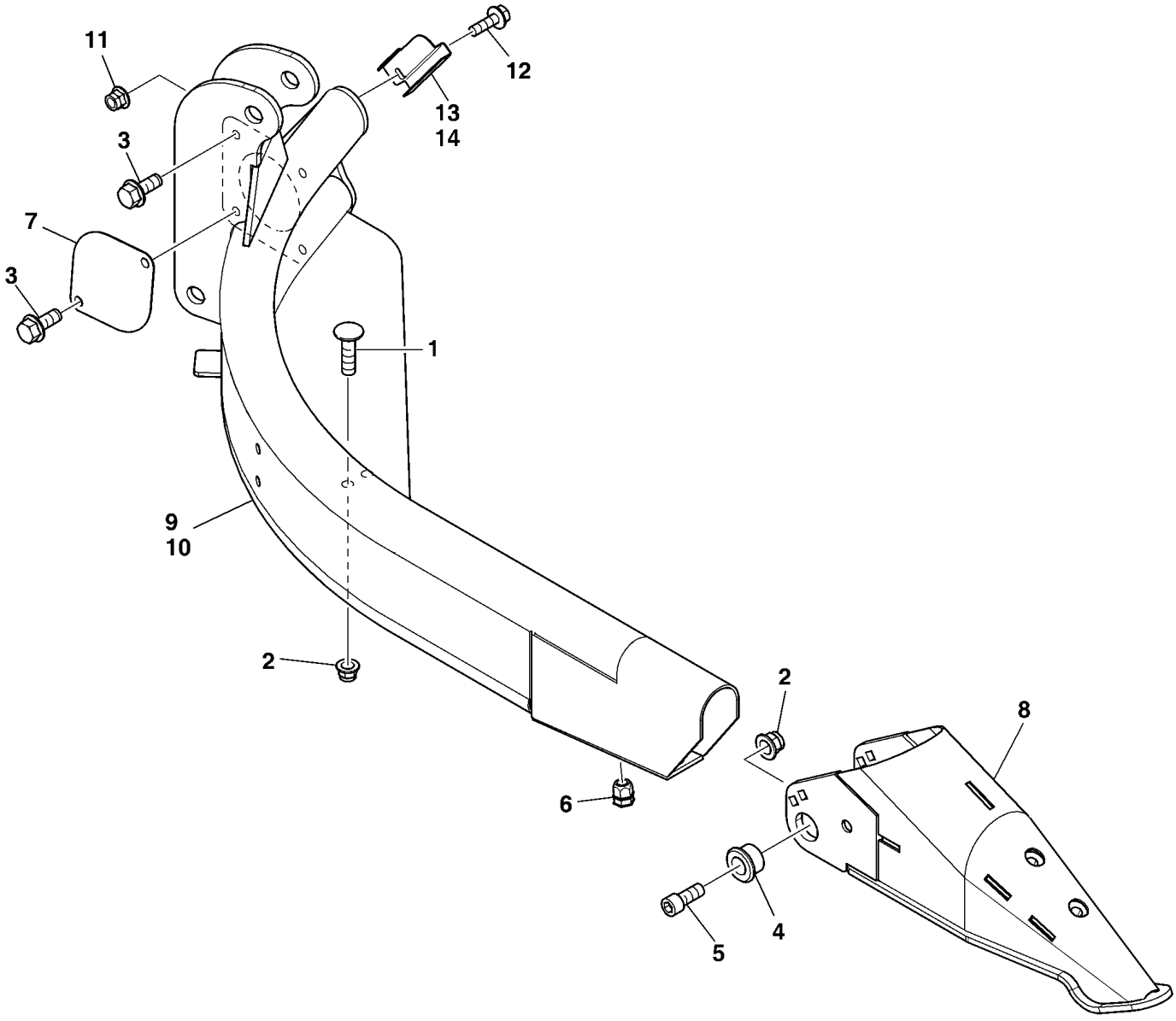

KM002231

CROP LIFTER (KM002231)

Item no.	Article no.	Description	Quantity	remarks
1	03M7198	BOLT	4	M12x30
2	14M7401	Flange Nut	8	M12
3	19M9571	Cap Screw	8	M12x30
4	LCA122009	BUSHING	4	
5	19M9713	BOLT	4	M12x30
6	LCA119290	NUT	4	
7	LCA74245	COVER	2	
8	133936	GATHERER POINT	2	
9	136094	CROP LIFTER	1	LH
10	136095	CROP LIFTER	1	RH
11	14M7397	NUT	2	M6
12	19M9444	CAP SCREW	2	M6x20
13	LCA137813	SHEET	1	LH
14	LCA137814	SHEET	1	RH

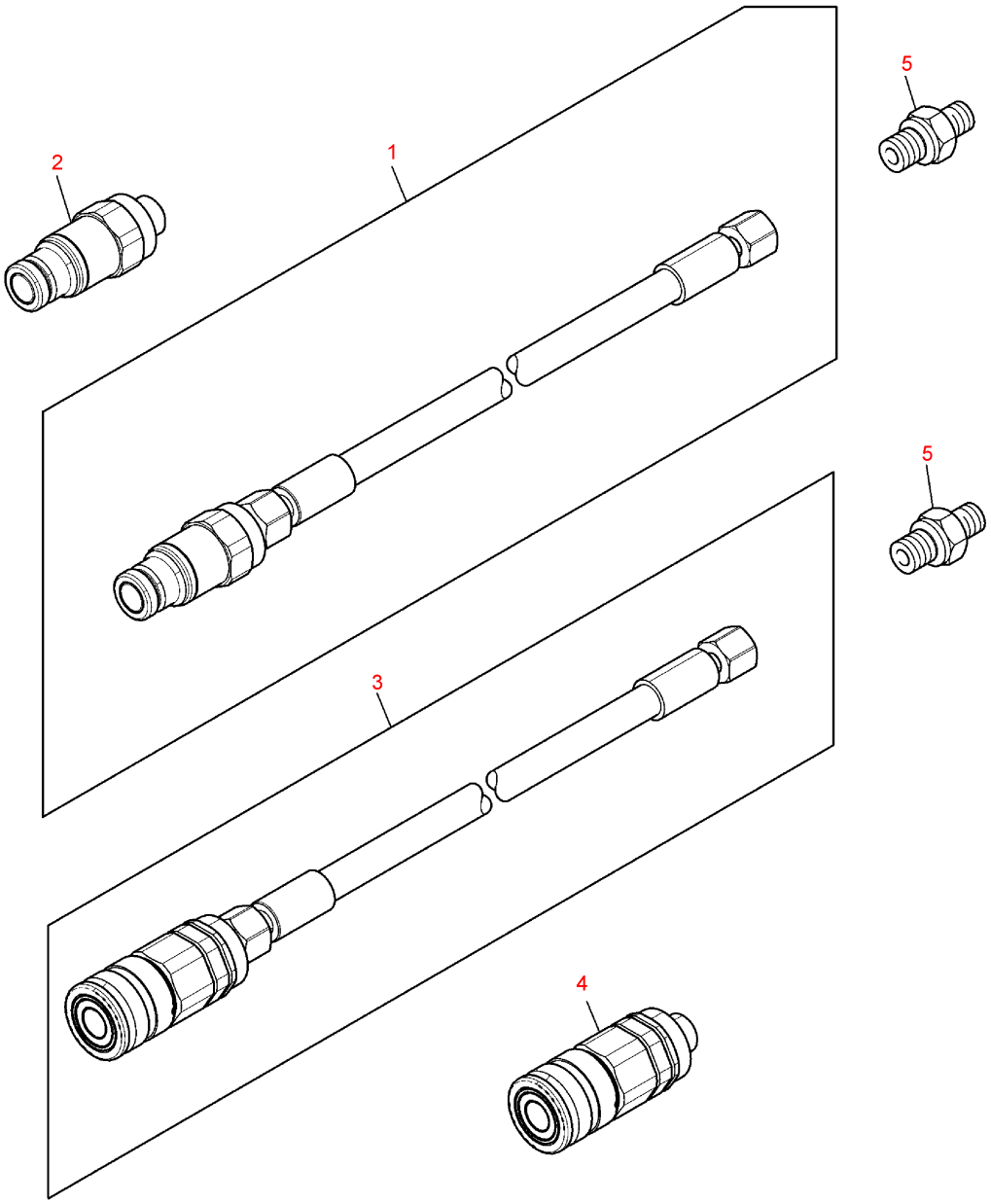

KE000618

HYDRAULIC LIFT COMPONENTS (KE000618)

Item no.	Article no.	Description	Quantity
1	LCA121304	HYDRAULIC HOSE	1
2	LCA111586	PLUG	1
3	LCA121305	HYDRAULIC HOSE	1
4	LCA111587	PLUG	1
5	LCA92935	FITTING	2

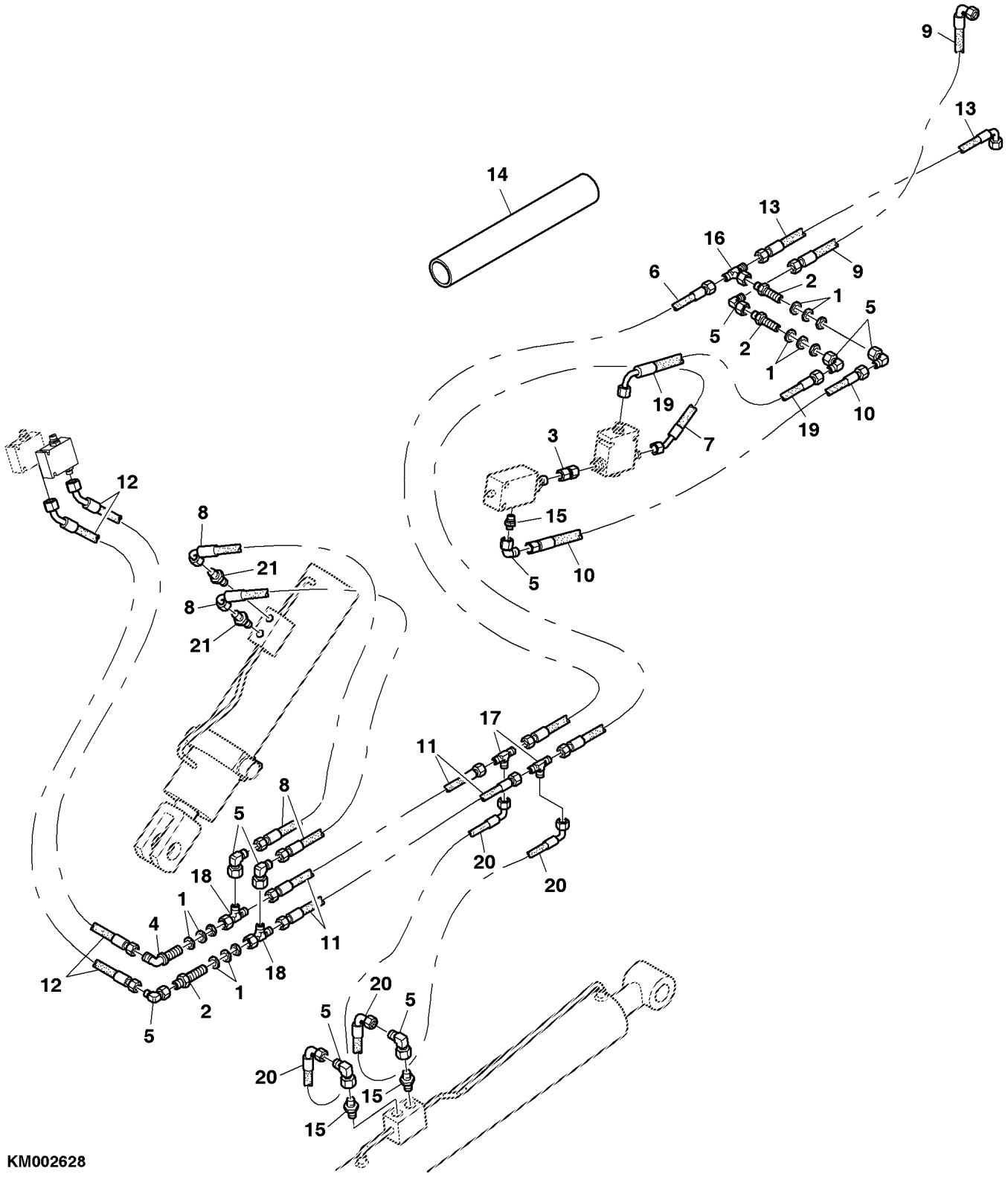
9
13
14
13
16
6
9
2
1
5
5
2
1
19
10
19
3
7
15
5
10
12
8
21
8
21
17
11
8
5
18
1
4
11
18
12
1
2
5
20
20
20
5
5
20
15
15
KM002628

HYDRAULIC LIFT COMPONENTS (KM002628)

Item no.	Article no.	Description	Quantity
1	24M7566	WASHER	8
2	LCA101669	FITTING	3
3	LCA102412	FITTING	1
4	LCA105076	FITTING	1
5	LCA88402	UNION FITTING	9
6	LCA113550	HYDRAULIC HOSE	1
7	LCA113551	HYDRAULIC HOSE	1
8	LCA121266	HYDRAULIC HOSE	2
9	LCA116545	HYDRAULIC HOSE	1
10	LCA134156	HYDRAULIC HOSE	1
11	LCA113558	HYDRAULIC HOSE	2
12	LCA115724	HYDRAULIC HOSE	2
13	LCA121264	HYDRAULIC HOSE	1
14	LCA115739	FABRIC HOSE	2
15	LCA51972	UNION FITTING	3
16	LCA90035	UNION FITTING	1
17	LCA70757	UNION FITTING	2
18	LCA74847	UNION FITTING	1
19	LCA83260	HYDRAULIC HOSE	1
20	LCA134156	HYDRAULIC HOSE	2
21	LCA70756	UNION FITTING	2

HYDRAULIC LIFT COMPONENTS (KM002627)

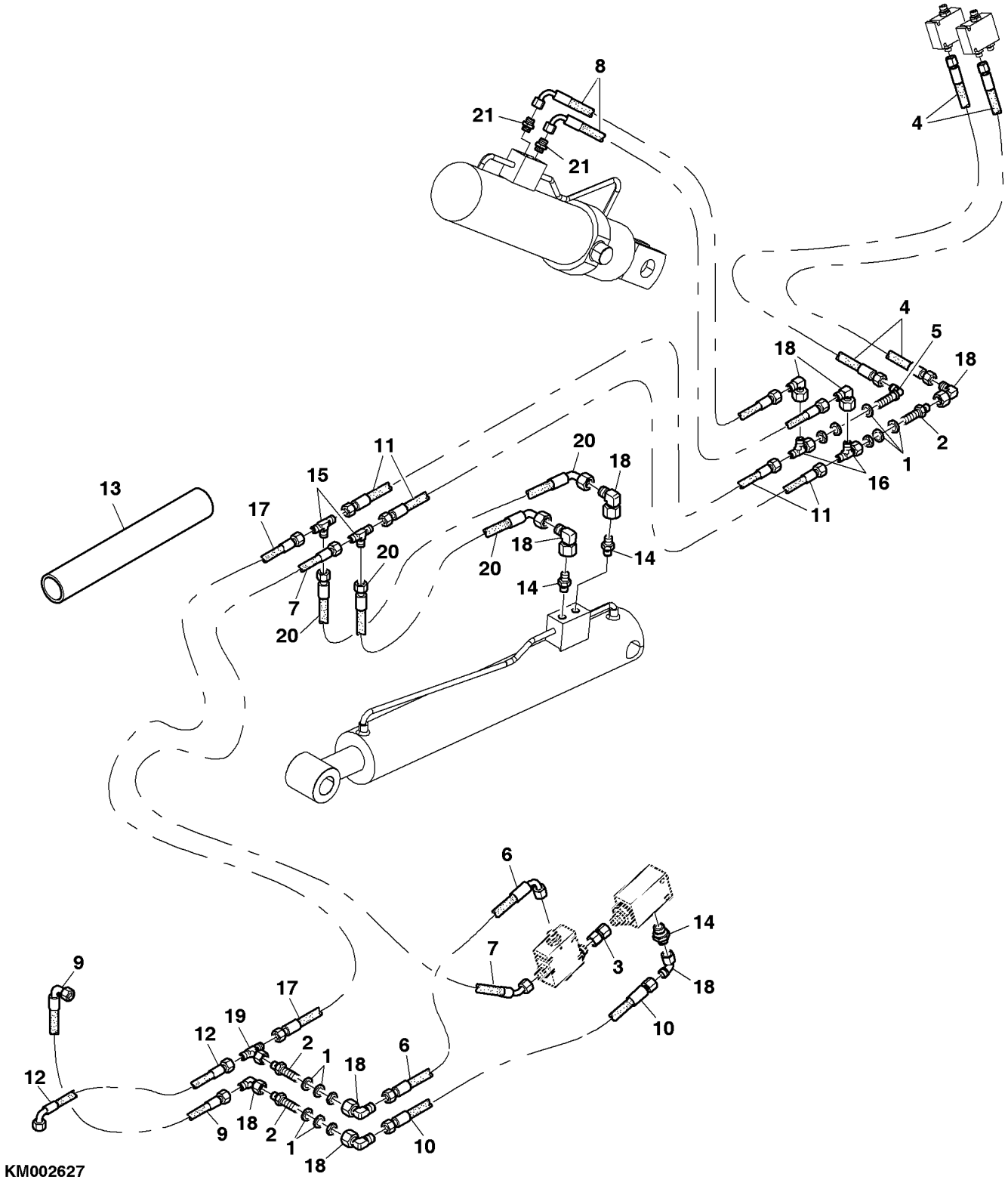

HYDRAULIC LIFT COMPONENTS (KM002627)

Item no.	Article no.	Description	Quantity
1	24M7566	WASHER	8
2	LCA101669	FITTING	3
3	LCA102412	FITTING	1
4	LCA104329	HYDRAULIC HOSE	2
5	LCA105076	FITTING	1
6	LCA83260	HYDRAULIC HOSE	1
7	LCA113551	HYDRAULIC HOSE	1
8	LCA121266	HYDRAULIC HOSE	2
9	LCA116545	HYDRAULIC HOSE	1
10	LCA134156	HYDRAULIC HOSE	1
11	LCA113558	HYDRAULIC HOSE	2
12	LCA121264	HYDRAULIC HOSE	1
13	LCA115739	FABRIC HOSE	2
14	LCA51972	UNION FITTING	3
15	LCA70757	UNION FITTING	2
16	LCA74847	UNION FITTING	2
17	LCA113550	HYDRAULIC HOSE	1
18	LCA88402	UNION FITTING	9
19	LCA90035	UNION FITTING	1
20	LCA134156	HYDRAULIC HOSE	2
21	LCA70756	UNION FITTING	2

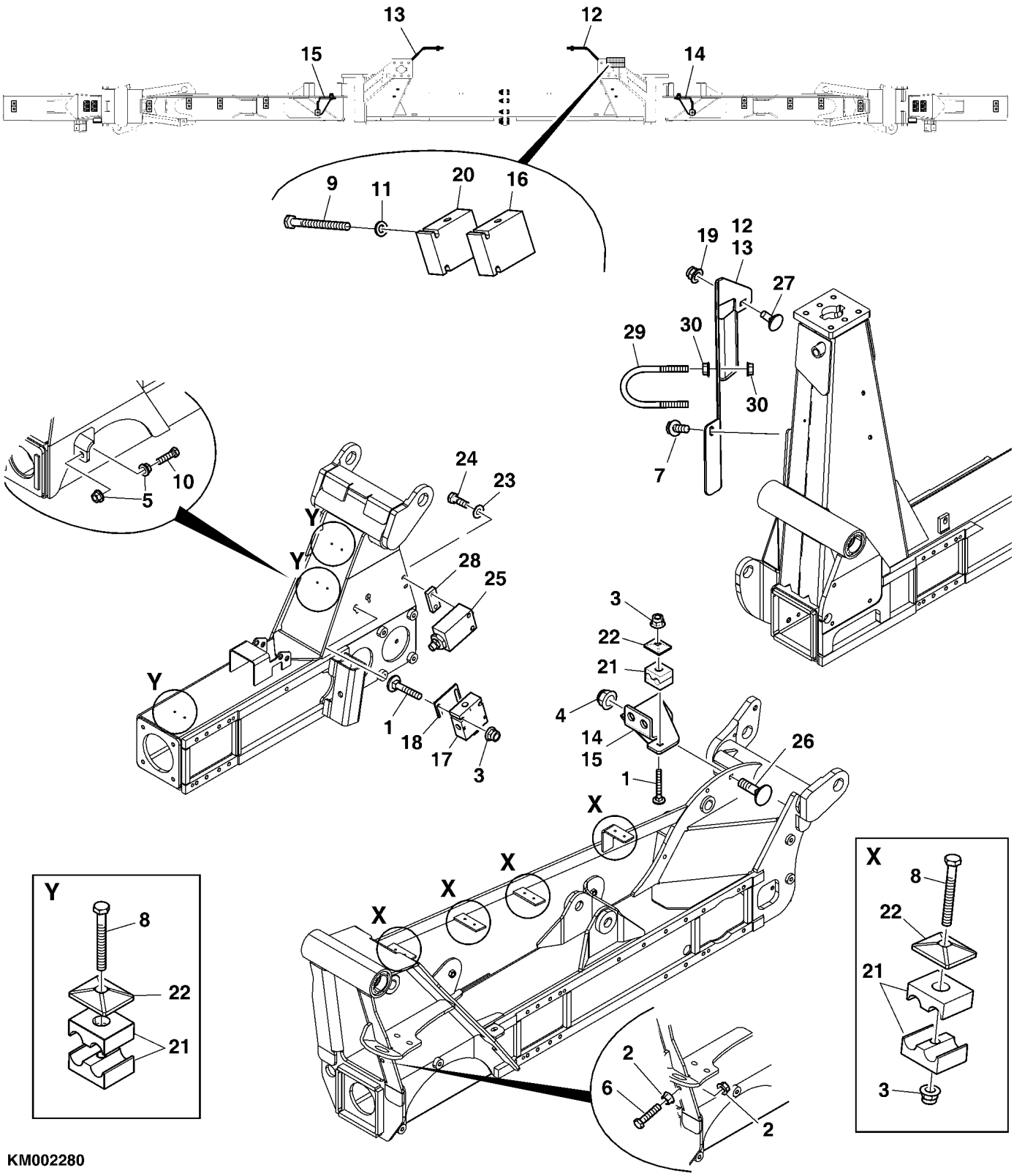
13
12
15
14
9
11
20
16
19
12
13
27
29
30
30
7
10
5
24
23
Y
Y
28
25
Y
3
22
21
4
14
15
1
26
1
18
17
3
X
X
X
X
Y
8
22
21
2
6
2
X
8
22
21
3

KM002280

Hydraulic lifting device (KM002280)

Item no.	Article no.	Description	Quantity	remarks
1	03M7438	BOLT	6	M6x50
2	14M7299	Flange Nut	4	M12
3	14M7397	NUT	AR	M6
4	14M7401	Flange Nut	2	M12
5	14M7590	Flange Nut	2	M16
6	19M10121	CAP SCREW	2	M12x55
7	19M9261	CAP SCREW	2	M8x20
8	19M9621	CAP SCREW	AR	M6x50
9	19M9623	CAP SCREW	2	M6x70
10	19M9693	CAP SCREW	2	M16x60
11	24M7506	WASHER	2	
12	LCA129243	SHEET	1	LH
13	LCA129244	SHEET	1	RH
14	LCA115721	SHEET	1	LH
15	LCA115722	SHEET	1	RH
16	LCA118478	FITTING	1	
17	LCA115725	HYDRAULIC VALVE	2	
18	LCA128342	SOLID SHIM	2	
19	14M7396	NUT	2	M8
20	LCA118480	FITTING	1	
21	LCA79185	CLAMP	AR	
22	LCA83295	PLATE	AR	
23	LCA71878	LOCK WASHER	4	
24	19M9640	CAP SCREW	4	
25	LCA128318	VALVE	2	
26	03M7408	BOLT	2	M12x35
27	03M7404	BOLT	2	M8x20
28	LCA128343	SOLID SHIM	2	
29	LCA130658	U-BOLT	4	
30	14M7298	Flange Nut	16	M8

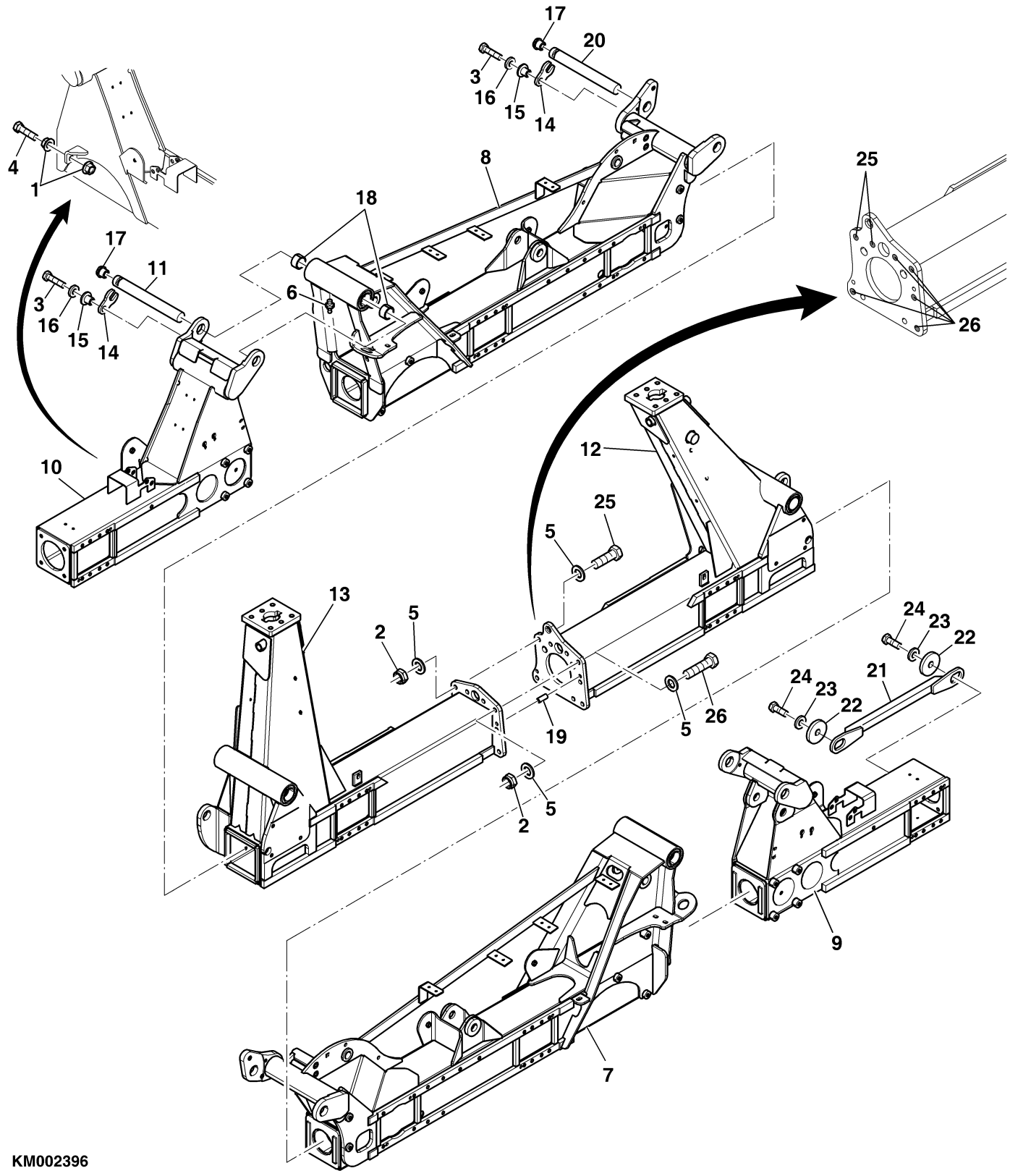
17
20
3
16
15
14
4
1
8
18
25
17
11
3
16
15
14
6
26
10
12
25
5
13
5
2
24
23
22
24
23
22
21
19
5
26
2
5
9
7

KM002396

BASE FRAME (KM002396)

Item no.	Article no.	Description	Quantity	remarks
1	14M7590	Flange Nut	4	M16
2	LCA134639	NUT	7	M16
3	19M9642	CAP SCREW	4	M10x40
4	19M9693	CAP SCREW	2	M16x60
5	24M7497	WASHER	16	
6	58M7017	LUBRICATION FITTING	4	
7	LCA135585	FRAME	1	LH
8	LCA135586	FRAME	1	RH
9	LCA122654	FRAME	1	LH
10	LCA122655	FRAME	1	RH
11	LCA112079	PIN FASTENER	2	
12	LCA135587	FRAME	1	LH
13	LCA135588	FRAME	1	RH
14	LCA114771	SHEET	4	
15	LCA114772	BUSHING	4	
16	LCA71878	LOCK WASHER	4	
17	LCA72096	PLUG	4	
18	LCA95892	BUSHING	8	
19	LCA72287	SPRING PIN	4	
20	LCA113599	PIN FASTENER	2	
21	LCA129298	SUPPORT	2	
22	LCA107842	WASHER	2	
23	LCA72740	LOCK WASHER	2	
24	19M9647	CAP SCREW	2	M12x25
25	LCA135584	CAP SCREW	2	M16x55
26	19M9901	CAP SCREW	5	M16x70

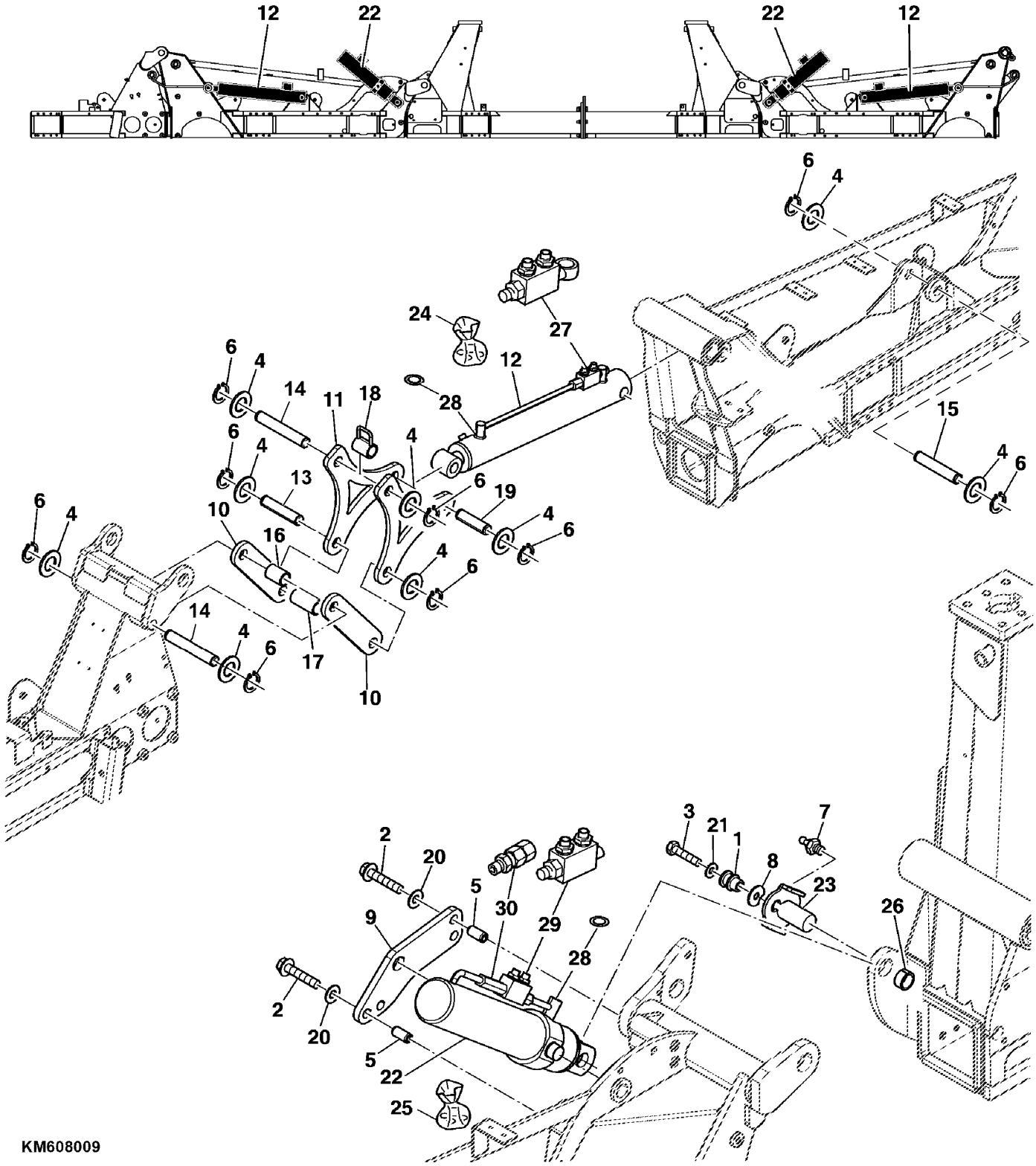
12
22
22
12
6
4
24
27
12
28
6
4
14
11
18
6
4
13
4
6
19
4
6
15
4
6
6
4
10
16
4
6
14
4
6
17
10
3
21
1
7
8
23
2
20
5
30
29
9
28
26
2
20
5
22
25
KM608009

BASE FRAME (KM608009)

Item no.	Article no.	Description	Quantity	remarks
1	LCA121046	BUSHING	2	
2	19M10082	CAP SCREW	8	M12x60
3	19M9686	CAP SCREW	2	M8x40
4	24M7512	WASHER	20	
5	34M7316	SPRING PIN	4	
6	40M7358	SNAP RING	20	
7	58M7017	LUBRICATION FITTING	2	
8	LCA118847	WASHER	2	
9	LCA129133	PLATE	2	
10	LCA118381	SHEET	4	
11	LCA111519	LEVER	4	
12	LCA136543	HYDRAULIC CYLINDER	2	
13	LCA112083	PIN FASTENER	2	
14	LCA112085	PIN FASTENER	4	
15	LCA112086	PIN FASTENER	2	
16	LCA112087	BUSHING	2	
17	LCA112088	BUSHING	2	
18	LCA113563	TUBE	2	
19	LCA113598	PIN FASTENER	2	
20	LCA72740	LOCK WASHER	8	
21	LCA84221	LOCK WASHER	2	
22	LCA136541	HYDRAULIC CYLINDER	2	
23	LCA121045	PIN FASTENER	2	
24	LCA114023	GASKET KIT	2	For LCA136543
25	LCA114022	GASKET KIT	2	For LCA136541
26	LCA80774	BUSHING	2	
27	LCA122532	VALVE	1	
28	LCA128917	RING	AR	
29	LCA122531	VALVE	1	
30	LCA122533	RESTRICTOR	1	

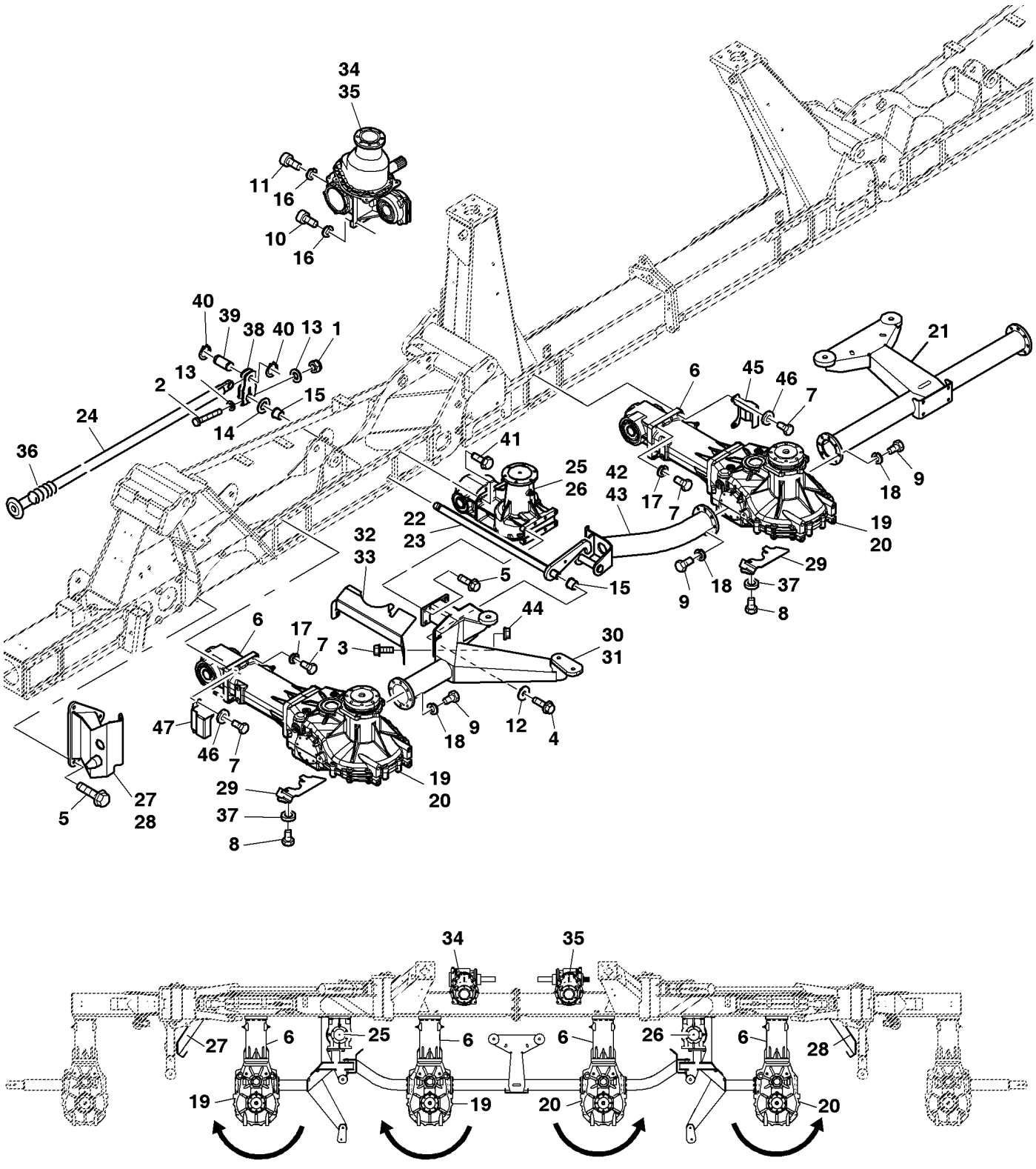
34
35
11
16
10
16
40
39
38
40
13
1
2
13
15
14
24
36
41
25
26
22
23
32
33
5
15
6
17
7
3
44
30
31
47
46
7
18
9
12
4
19
20
29
37
8
27
28
5
6
45
46
7
21
42
43
17
7
18
9
19
20
29
37
8
9
18

34
35
27
6
25
6
6
26
6
28
19
19
20
20

KM002664

BASE FRAME (KM002664)

Item no.	Article no.	Description	Quantity	remarks
1	14M7319	NUT	AR	M12
2	19M10402	CAP SCREW	4	M12x70
3	19M9568	CAP SCREW	AR	M8x20
4	19M9570	CAP SCREW	AR	M12x25
5	19M9571	Cap Screw	AR	M12x30
6	LCA125059	TRANSMISSION	4	
7	19M9600	CAP SCREW	AR	M12x55
8	19M9638	CAP SCREW	AR	M10x20
9	19M9640	CAP SCREW	AR	M10x30
10	19M9714	BOLT	AR	M12x35
11	19M9715	BOLT	AR	M12x40
12	24M7484	WASHER	AR	
13	24M7491	WASHER	AR	
14	24M7512	WASHER	AR	
15	CC107623	BUSHING	2	
16	LCA03356	LOCK WASHER	4	
17	LCA04201	LOCK WASHER	AR	
18	LCA04218	LOCK WASHER	AR	
19	LCA122211	TRANSMISSION	2	
20	LCA122212	TRANSMISSION	2	
21	LCA106984	BRACKET	1	
22	LCA129857	SHAFT	1	LH
23	LCA129858	SHAFT	1	RH
24	LCA112138	BRACE	2	
25	LCA136211	TRANSMISSION	1	
26	LCA136210	TRANSMISSION	1	
27	LCA113095	BRACKET	1	RH
28	LCA113094	BRACKET	1	LH
29	LCA113273	SHEET	4	
30	LCA118420	BRACKET	1	LH
31	LCA118421	BRACKET	1	RH
32	LCA118414	SHEET	1	LH
33	LCA118415	SHEET	1	RH
34	LCA122200	TRANSMISSION	1	
35	LCA122201	TRANSMISSION	1	
36	LCA66401	COMPRESSION SPRING	2	

BASE FRAME (KM002664)

Item no.	Article no.	Description	Quantity	remarks
37	LCA71878	LOCK WASHER	8	
38	LCA123944	CLAMP	2	
39	LCA135085	PIN FASTENER	2	
40	40M7269	SNAP RING	4	
41	LCA94907	CAP SCREW	AR	
42	LCA112102	BRACKET	1	LH
43	LCA112103	BRACKET	1	RH
44	14M7396	NUT	2	M8
45	LCA128353	SHEET	2	
46	24M7491	WASHER	8	
47	LCA128354	SHEET	2	

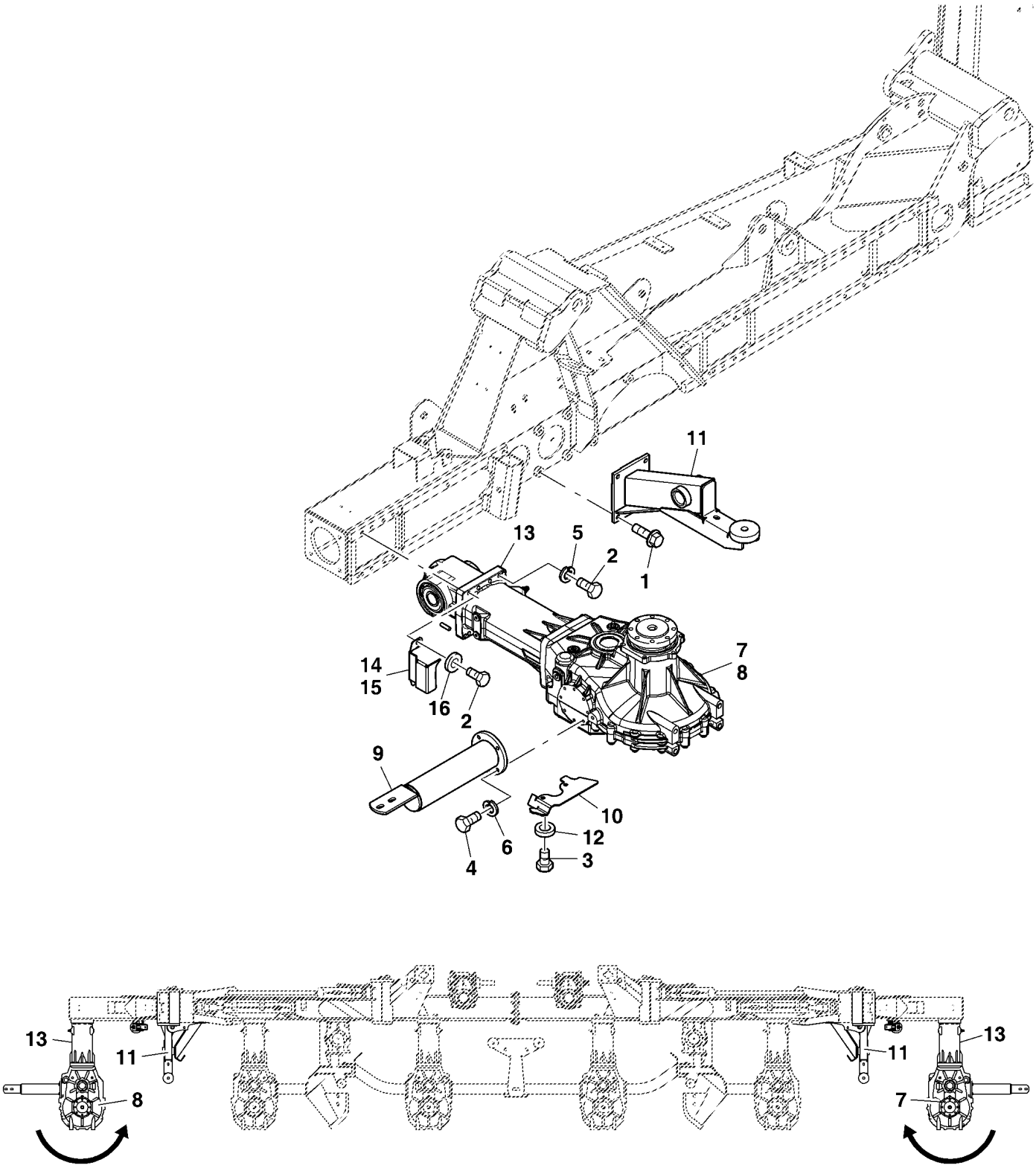

KM002258

GEARBOX OVERVIEW (KM002258)

Item no.	Article no.	Description	Quantity	remarks
1	19M9571	Cap Screw	AR	M12x30
2	19M9600	CAP SCREW	AR	M12x55
3	19M9638	CAP SCREW	AR	M10x20
4	19M9640	CAP SCREW	AR	M10x30
5	LCA04201	LOCK WASHER	AR	
6	LCA04218	LOCK WASHER	AR	
7	LCA122211	TRANSMISSION	1	
8	LCA122212	TRANSMISSION	1	
9	LCA110025	BRACE	2	
10	LCA113273	SHEET	2	
11	LCA118428	BRACKET	2	
12	LCA71878	LOCK WASHER	4	
13	LCA125059	TRANSMISSION	2	
14	LCA128353	SHEET	1	LH
15	LCA128354	SHEET	1	RH
16	24M7491	WASHER	4	

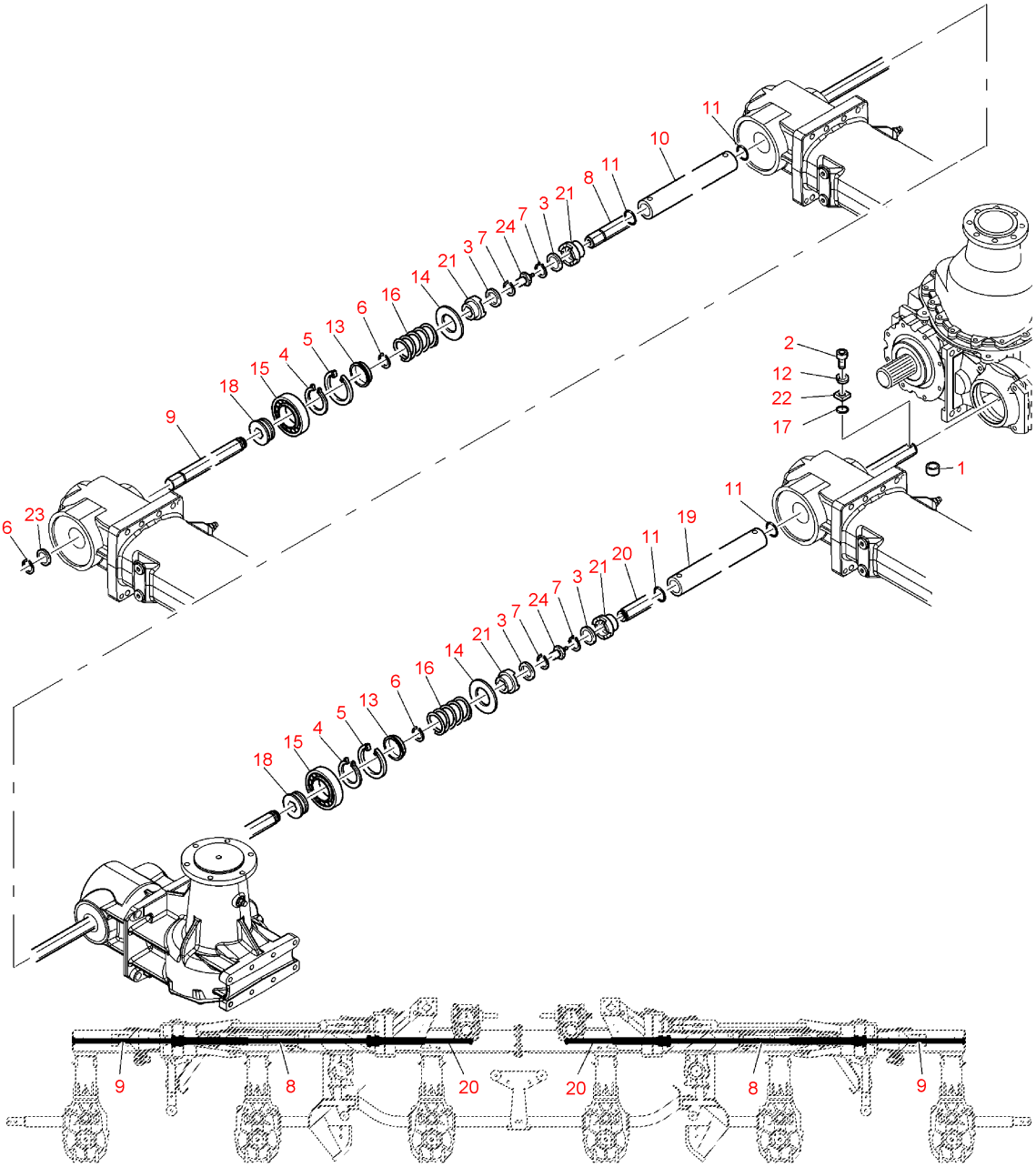
11
10
8
11
21
3
7
24
7
3
21
14
16
6
13
5
4
15
18
9
6
23
2
12
22
17
1
11
19
11
20
21
3
7
24
7
3
21
14
16
6
13
5
4
15
18
9
8
20
20
8
9

KM001771

Drive shaft (KM001771)

Item no.	Article no.	Description	Quantity	remarks
1	15M7090	FITTING PLUG	2	M30x1,5
2	19M9704	BOLT	2	M10x25
3	24M7536	WASHER	8	
4	40M1841	SNAP RING	4	
5	40M1873	SNAP RING	4	
6	40M7012	SNAP RING	6	
7	40M7200	SNAP RING	8	
8	LCA112089	SHAFT	2	
9	LCA112093	SHAFT	2	
10	LCA112094	TUBE	2	
11	LCA32029	O-RING	2	
12	LCA40940	LOCK WASHER	2	
13	LCA62683	DISK	4	
14	LCA62684	DISK	4	
15	LCA64557	BALL BEARING	4	
16	LCA64574	COMPRESSION SPRING	4	
17	LCA71951	O-RING	2	
18	LCA73125	BUSHING	4	
19	LCA85878	TUBE	2	
20	LCA90379	SHAFT	2	
21	LCA69654	SHIFT COLLAR	8	
22	LCA69662	STOP	2	
23	LCA97658	WASHER	2	
24	LCA98300	LUBRICATION FITTING	4	

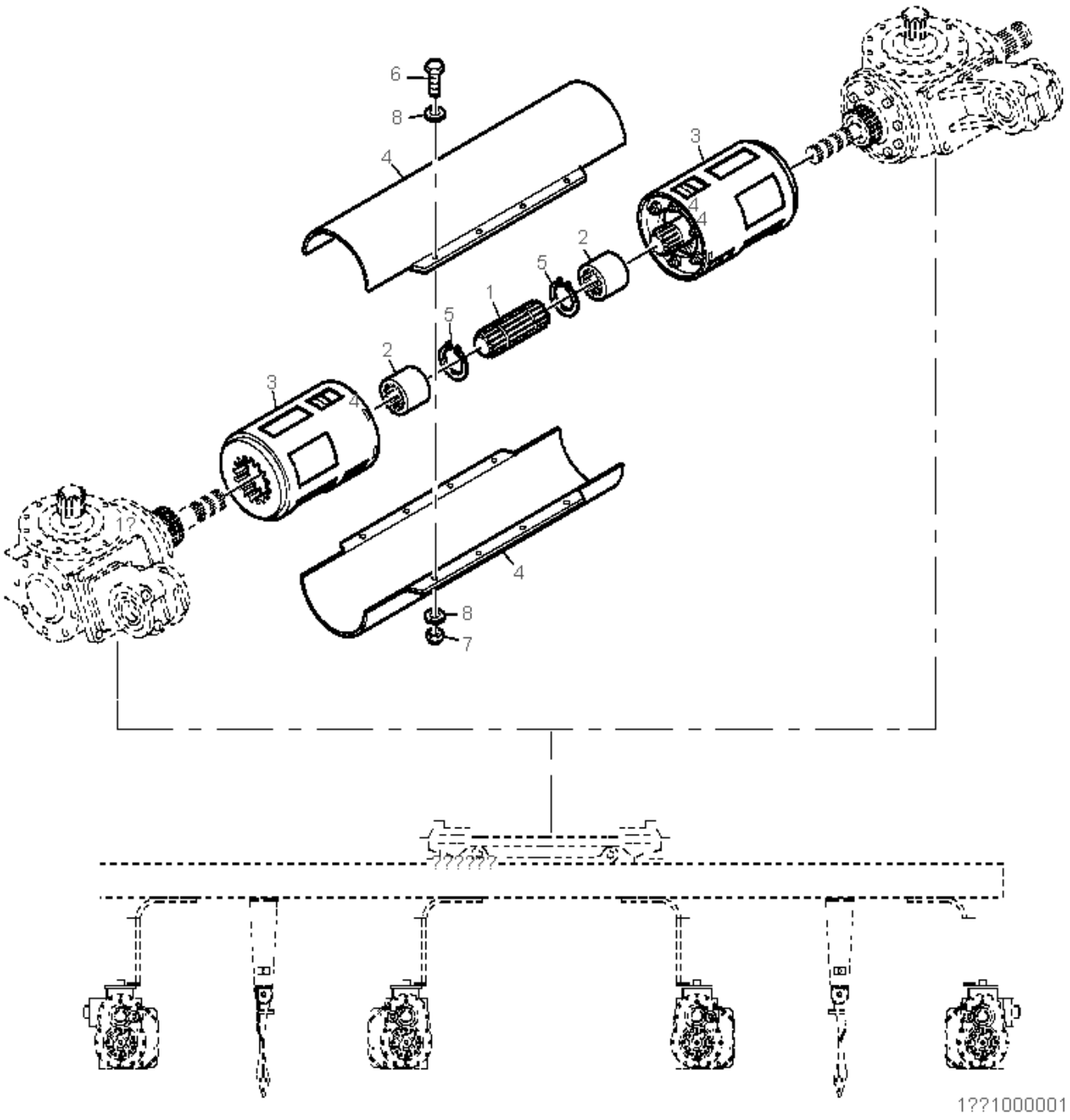
6
8
4
3
2
5
1
12
7
1??1000001

Drive shaft for launch clutches (KM000001)

Item no.	Article no.	Description	Quantity	remarks
1	LCA86019	SHAFT	1	
2	LCA86018	BUSHING	2	
3	LCA97136	SLIP CLUTCH	2	
4	LCA78074	GUARD	2	
5	40M7014	SNAP RING	2	
6	19M9682	CAP SCREW	8	M8x20
7	14M7659	NUT	8	M8
8	24M7036	WASHER	16	

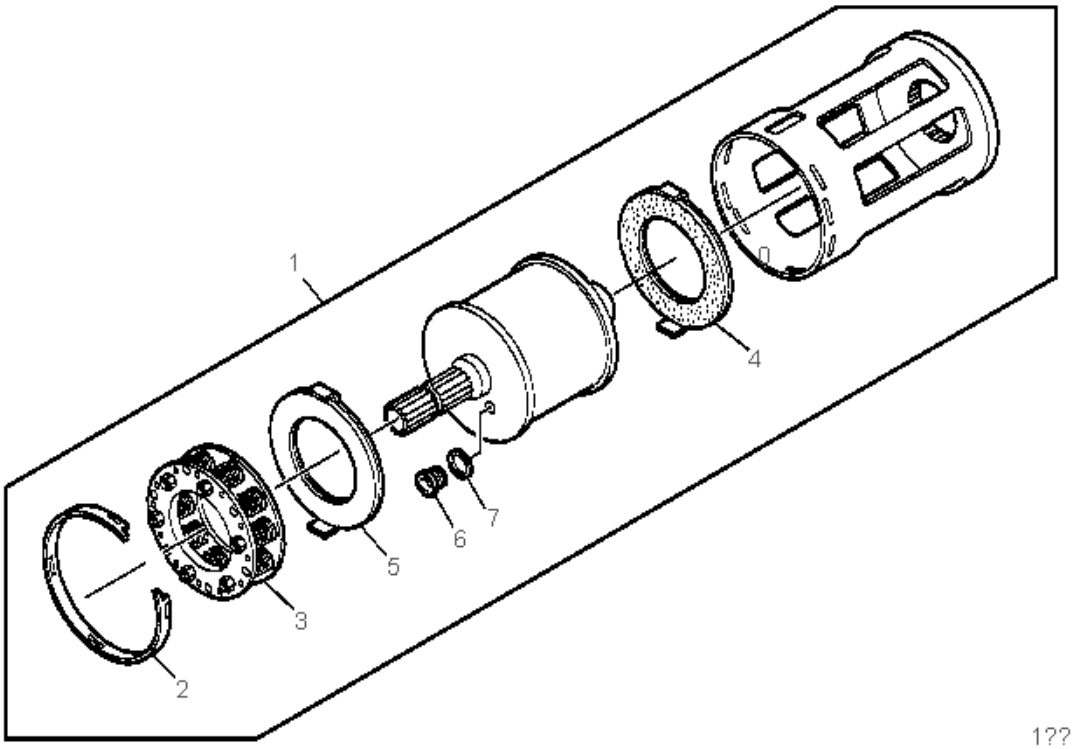

1??1000007

Friction clutch – water cooled (KM000007)

Item no.	Article no.	Description	Quantity
1	LCA97136	SLIP CLUTCH	1
2	LCA55051	RING	1
3	LCA59045	SPRING ASSEMBLY	1
4	LCA77875	CLUTCH DISK	1
5	LCA79570	CLUTCH DISK	1
6	LCA77872	FITTING PLUG	1
7	LCA05811	SEALING RING	1

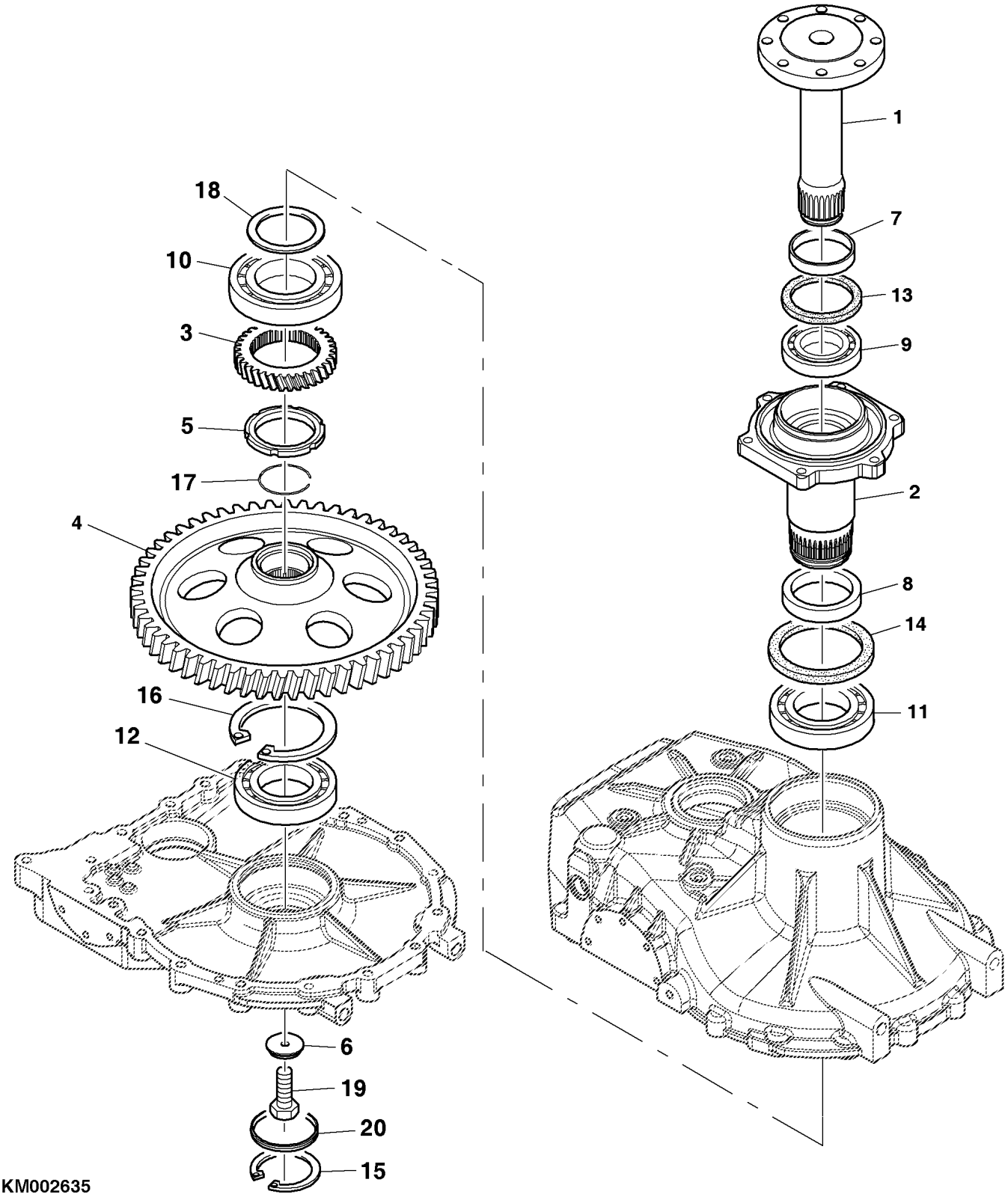
1
7
13
9
2
8
14
11
18
10
3
5
17
4
16
12
6
19
20
15
KM002635

SPUR GEAR FOR FEEDING DRUM (KM002635)

Item no.	Article no.	Description	Quantity	remarks
1	LCA107326	SHAFT	1	
2	LCA107337	SHAFT	1	
3	LCA122234	PINION	1	For LCA122212
3	LCA122233	PINION	1	For LCA122211
4	LCA107393	PINION	1	For LCA122212
4	LCA107392	PINION	1	For LCA122211
5	LCA107380	NUT	1	
6	LCA110427	THRUST WASHER	1	
7	LCA107329	SPACER	1	
8	LCA107330	SPACER	1	
9	LCA62752	BALL BEARING	1	
10	LCA38332	BALL BEARING	1	
11	LCA65597	BALL BEARING	1	
12	JD9439	BALL BEARING	1	
13	LCA91695	SEAL	1	
14	LCA114013	SEAL	1	
15	40M1871	SNAP RING	5	
16	LCA114014	SNAP RING	1	
17	70072	SEAL	1	
18	LCA110425	SHIM	2	
19	19M9659	CAP SCREW	1	M16x45
20	LCA114010	CAP	4	

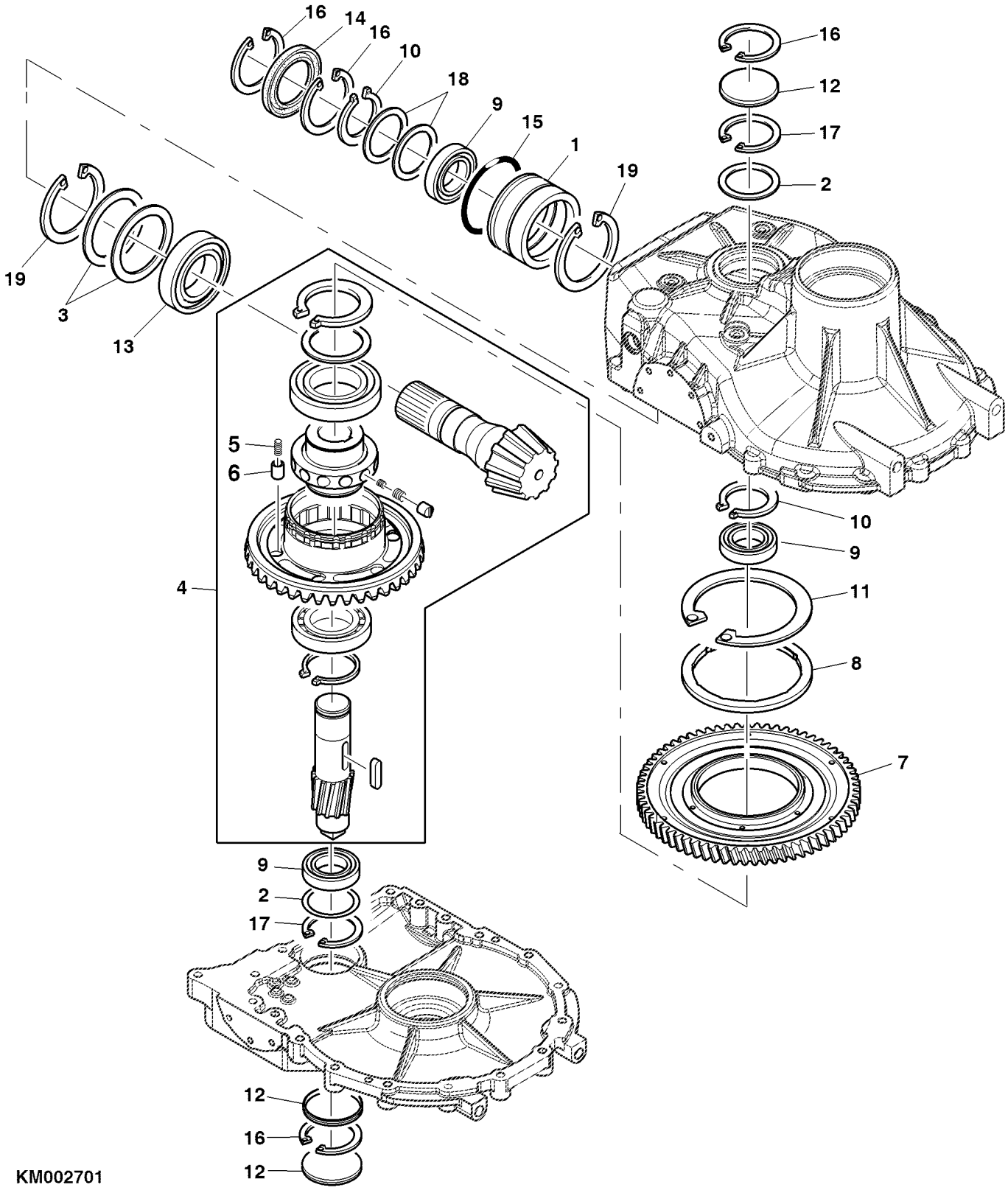
16
14
16
10
18
9
15
1
19
19
3
13
16
12
17
2
5
6
4
10
9
11
8
7
9
2
17
12
16
12
KM002701

SPUR GEAR FOR FEEDING DRUM (KM002701)

Item no.	Article no.	Description	Quantity	remarks
1	LCA107325	BUSHING	1	
2	LCA110422	SHIM	2	
3	LCA110421	SHIM	1	
4	LCA134707	BEVEL GEAR DRIVE	1	For LCA122212
4	LCA134706	BEVEL GEAR DRIVE	1	For LCA122211
5	LCA128908	COMPRESSION SPRING	3	
6	LCA134702	PIN FASTENER	3	
7	LCA122236	SPUR GEAR	1	For LCA122212
7	LCA122235	SPUR GEAR	1	For LCA122211
8	LCA134703	RING	1	
9	LCA05118	TAPERED ROLLER BEARING	2	
10	40M7014	SNAP RING	2	
11	LCA118851	SNAP RING	1	
12	LCA114010	CAP	4	
13	LCA05119	TAPERED ROLLER BEARING	1	
14	LCA58673	SEAL	1	
15	LCA91697	O-RING	1	
16	40M1871	SNAP RING	5	
17	LCA114011	SNAP RING	2	
18	LCA110425	SHIM	2	
19	LCA35964	SNAP RING	2	

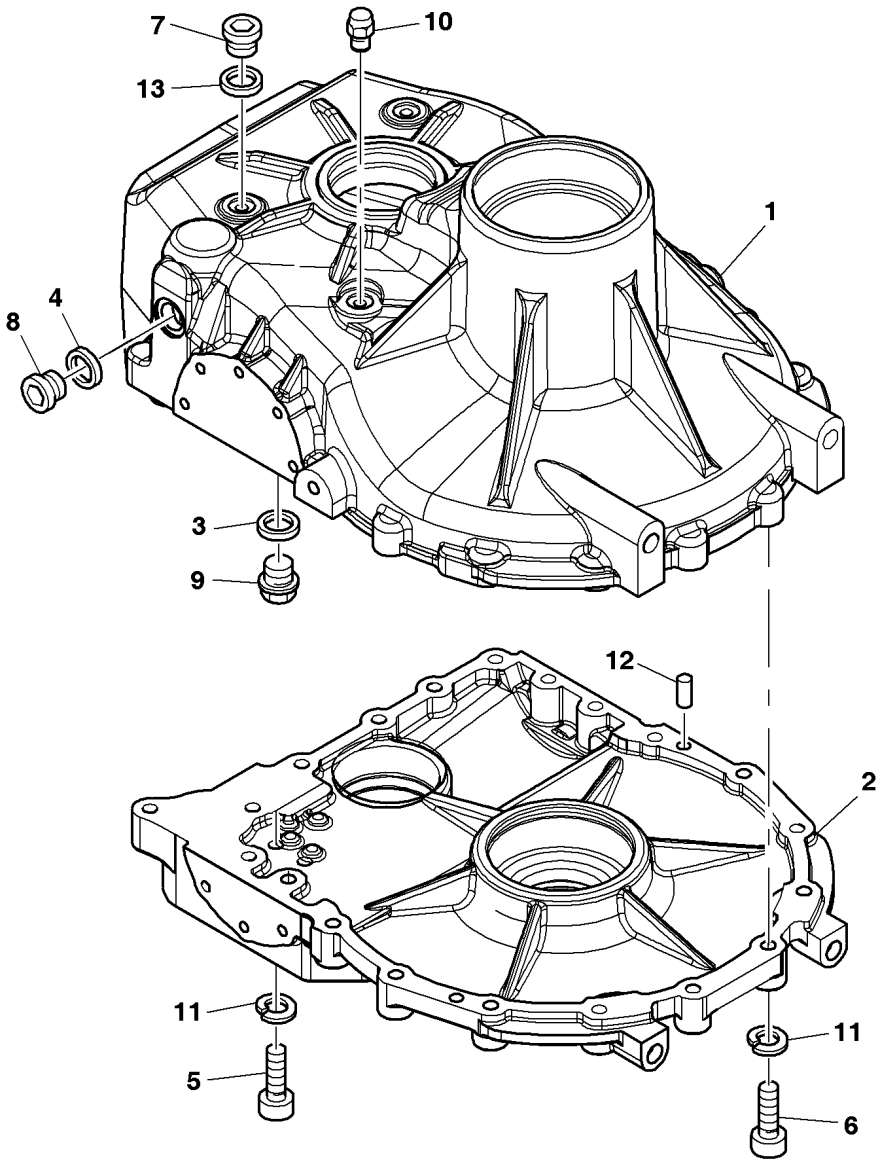

KM002637

SPUR GEAR FOR FEEDING DRUM (KM002637)

Item no.	Article no.	Description	Quantity	remarks
1	LCA122231	HOUSING	1	
2	LCA122232	HOUSING	1	
3	LCA03435	SEALING RING	1	
4	51M7018	SEALING RING	1	
5	19M9704	BOLT	2	M10x25
6	19M9708	BOLT	17	M10x45
7	LCA98092	FITTING PLUG	3	
8	15M7026	FITTING PLUG	1	
9	LCA114009	SCREW	1	
10	LCA82131	VALVE	1	
11	12M7135	LOCK WASHER	20	
12	LCA91704	SPRING PIN	2	
13	51M4232	SEALING RING	3	

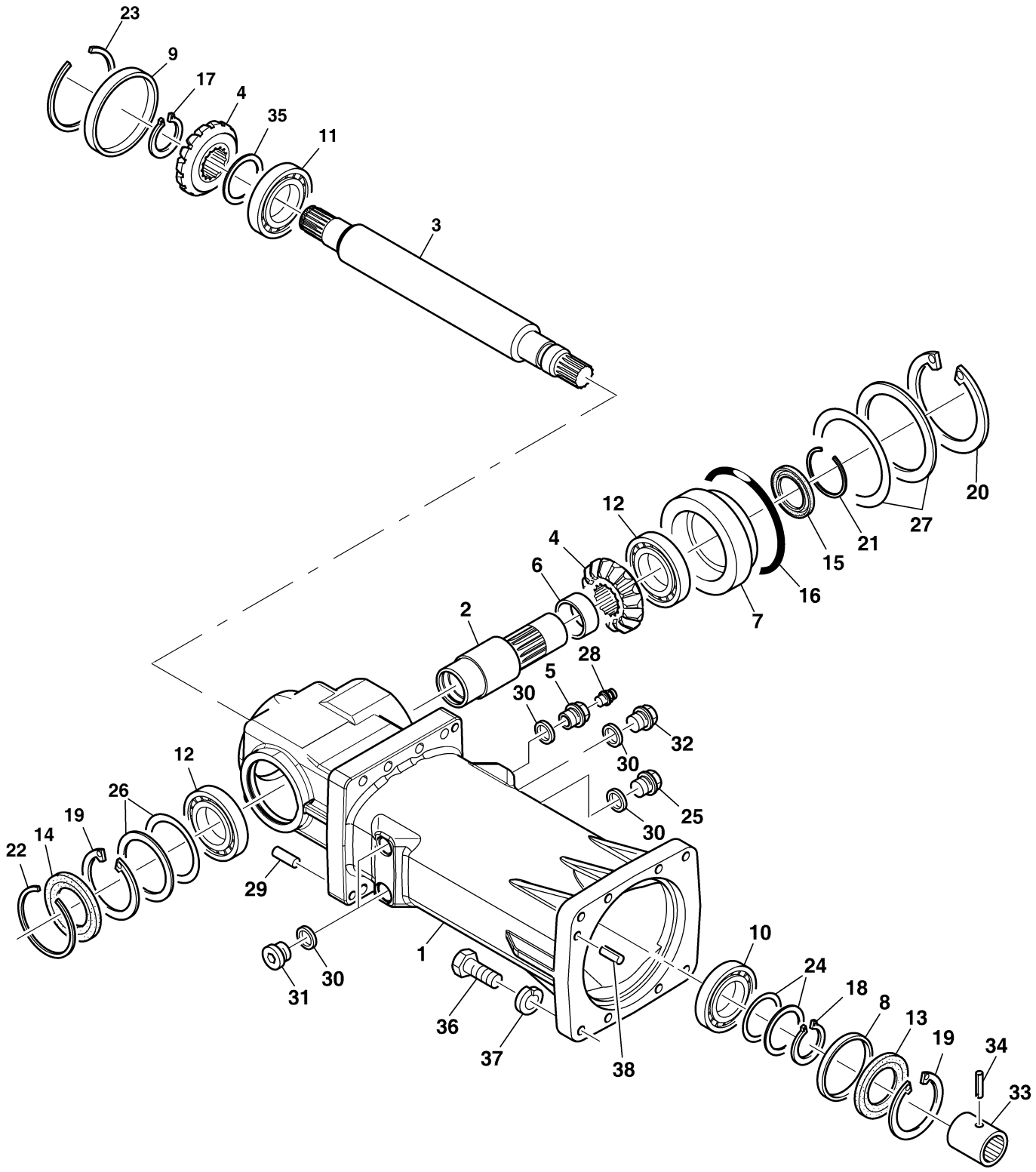
23
9
17
4
35
11
3
20
27
21
15
16
7
12
4
6
2
28
5
30
32
30
25
30
12
26
19
14
22
29
1
10
24
18
8
13
19
34
33
31
30
36
37
38

KM002016

TRANSMISSION (KM002016)

Item no.	Article no.	Description	Quantity	remarks
1	LCA107348	HOUSING	1	
2	LCA91525	SHAFT	1	
3	LCA107359	SHAFT	1	
4	LCA91734	BEVEL GEAR DRIVE	1	
5	LCA86768	FITTING PLUG	1	
6	LCA91529	BUSHING	1	
7	LCA110348	BUSHING	1	
8	LCA110349	SPACER	1	
9	LCA114007	CAP	1	
10	11858	BALL BEARING	1	
11	LCA71928	BALL BEARING	1	
12	LCA40556	TAPERED ROLLER BEARING	2	
13	LCA58673	SEAL	1	
14	LCA86868	SEAL	1	
15	LCA92093	SEAL	1	
16	L62735	O-RING	1	
17	40M1835	SNAP RING	1	
18	40M7014	SNAP RING	1	
19	40M1871	SNAP RING	2	
20	40M5427	SNAP RING	1	
21	LCA75896	SNAP RING	1	
22	LCA65149	SNAP RING	1	
23	LCA61185	SNAP RING	1	
24	LCA110425	SHIM	1	
25	LCA114009	SCREW	1	
26	LCA110422	SHIM	1	
27	LCA110423	SHIM	1	
28	LCA82131	VALVE	1	
29	LCA72292	SPRING PIN	2	
30	71954	SEALING RING	5	
31	LCA11657	FITTING PLUG	2	
32	03431	FITTING PLUG	1	
33	LCA107328	SPLINED COUPLING	1	
34	05804	SPRING PIN	1	
35	24M7319	SHIM	AR	
36	19M9585	CAP SCREW	8	M10x45

Item no.	Article no.	Description	Quantity	remarks
37	LCA04218	LOCK WASHER	8	
38	LCA91704	SPRING PIN	1	

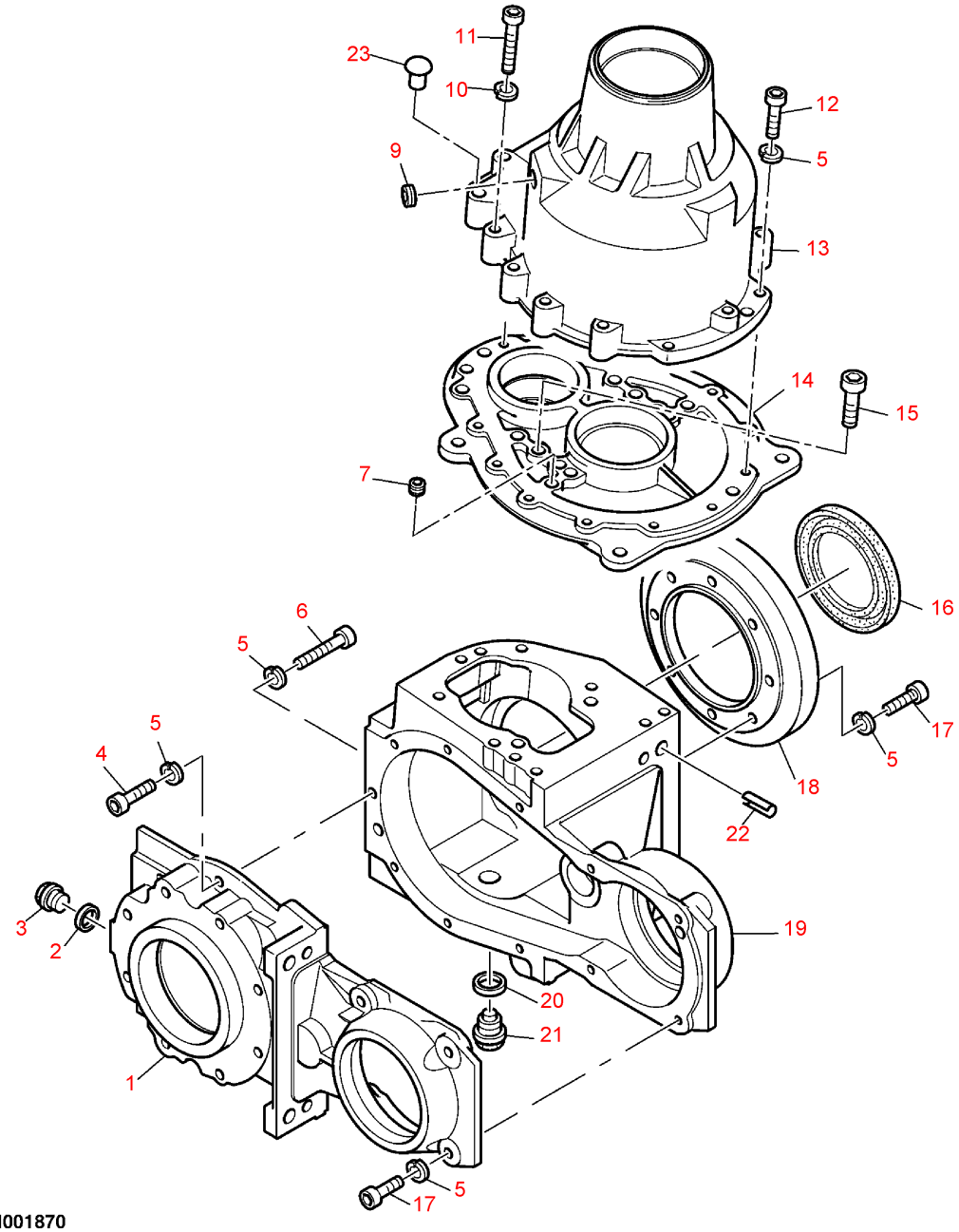

KM001870

Item no.	Article no.	Description	Quantity	remarks
1	LCA88518	HOUSING	1	
2	37848	SEALING RING	1	
3	LCA59408	FITTING PLUG	1	
4	19M9740	BOLT	AR	M8x35
5	LCA57540	LOCK WASHER	AR	
6	19M8658	BOLT	1	M8x60
7	22M7113	SCREW	1	
8	44M7152	DOWEL PIN	1	
9	15M7091	FITTING PLUG	1	
10	LCA40940	LOCK WASHER	8	
11	19M8676	BOLT	3	M10x65
12	19M9741	BOLT	9	M8x45
13	LCA88519	HOUSING	1	NSEP ORD LCA122199
14	LCA88517	HOUSING	1	
15	19M9706	BOLT	6	M10x35
16	LCA91713	SEAL	1	
17	19M9739	BOLT	AR	M8x30
18	LCA91722	COVER	1	
19	LCA88520	HOUSING	1	
20	LCA03435	SEALING RING	1	
21	LCA59521	SCREW	1	
22	LCA91704	SPRING PIN	5	
23	LCA13976	VALVE	1	
.....	LCA122199	KIT	1	Gehäuse und Hohlrad

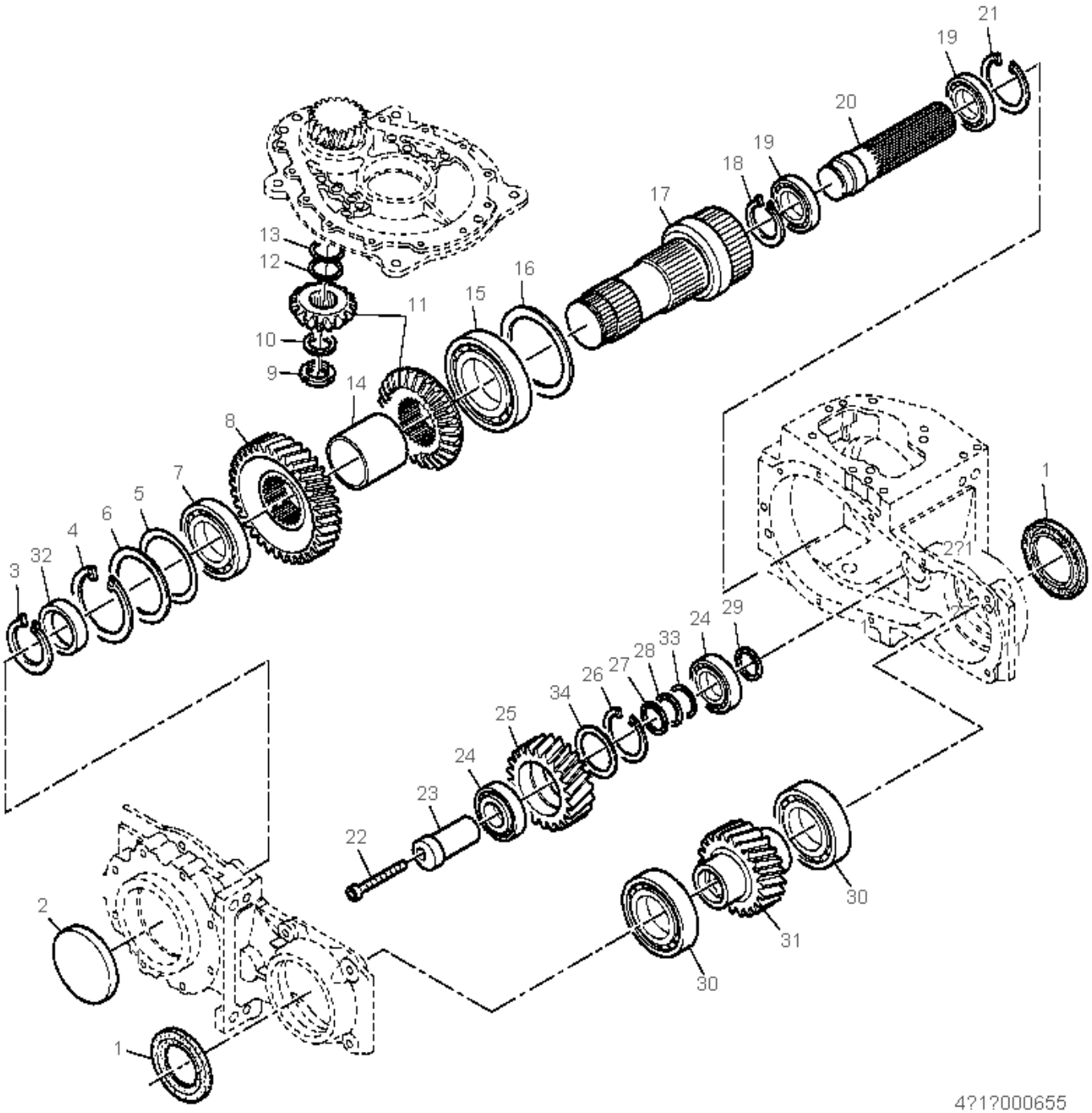
21
19
20
19
18
17
13
12
16
11
15
10
9
14
8
7
5
6
4
32
3
1
2?1
24
29
33
28
27
26
34
25
24
23
22
30
31
30
2
1
4?1?000655

Helical spur gear LCA122200 (KM000655)

Item no.	Article no.	Description	Quantity	remarks
1	LCA94239	SEAL	2	
2	LCA52008	CAP	1	
3	40M1841	SNAP RING	1	
4	40M1873	SNAP RING	1	
5	LCA98500	SPACER	1	
6	24M7154	SHIM	AR	TK = 0,1 mm
6	24M7168	SHIM	AR	TK = 0,3 mm
6	24M7576	SHIM	AR	TK = 0,5 mm
7	LCA46097	TAPERED ROLLER BEARING	1	
8	LCA98490	SPUR GEAR	1	
9	LCA29076	NUT	1	
10	24M7375	WASHER	1	
11	LCA91735	BEVEL GEAR DRIVE	1	
12	24M7199	SHIM	AR	TK = 0,5 mm
12	24M7304	SHIM	AR	TK = 0,3 mm
12	24M7305	SHIM	AR	TK = 0,1 mm
13	24M7303	SHIM	1	TK = 1.0 mm
14	LCA98491	SPACER	1	
15	LCA58688	BALL BEARING	1	
16	24M7575	SHIM	AR	TK = 0,3 mm
16	24M7165	SHIM	AR	TK = 0,1 mm
16	LCA62761	SHIM	AR	TK = 0,5 mm
17	LCA98489	SHAFT	1	
18	40M1835	SNAP RING	1	
19	LCA36868	BALL BEARING	2	
20	LCA87846	SHAFT	1	
21	40M5546	SNAP RING	1	
22	19M7604	BOLT	1	M8x80
23	LCA87842	PIN FASTENER	1	
24	LCA65598	TAPERED ROLLER BEARING	2	
25	LCA87841	SPUR GEAR	1	
26	40M1868	SNAP RING	1	
27	LCA69672	WASHER	1	
28	LCA69673	KIT	1	
29	24M7536	WASHER	1	
30	LCA27946	BALL BEARING	2	

Helical spur gear LCA122200 (KM000655)

Item no.	Article no.	Description	Quantity	remarks
31	LCA87749	SPUR GEAR	1	
32	LCA98499	SPACER	1	
33	LCA98501	SHIM	1	TK = 1.0 mm
34	24M4813	SHIM	1	

Helical spur gear LCA122200/01 (KM000184)

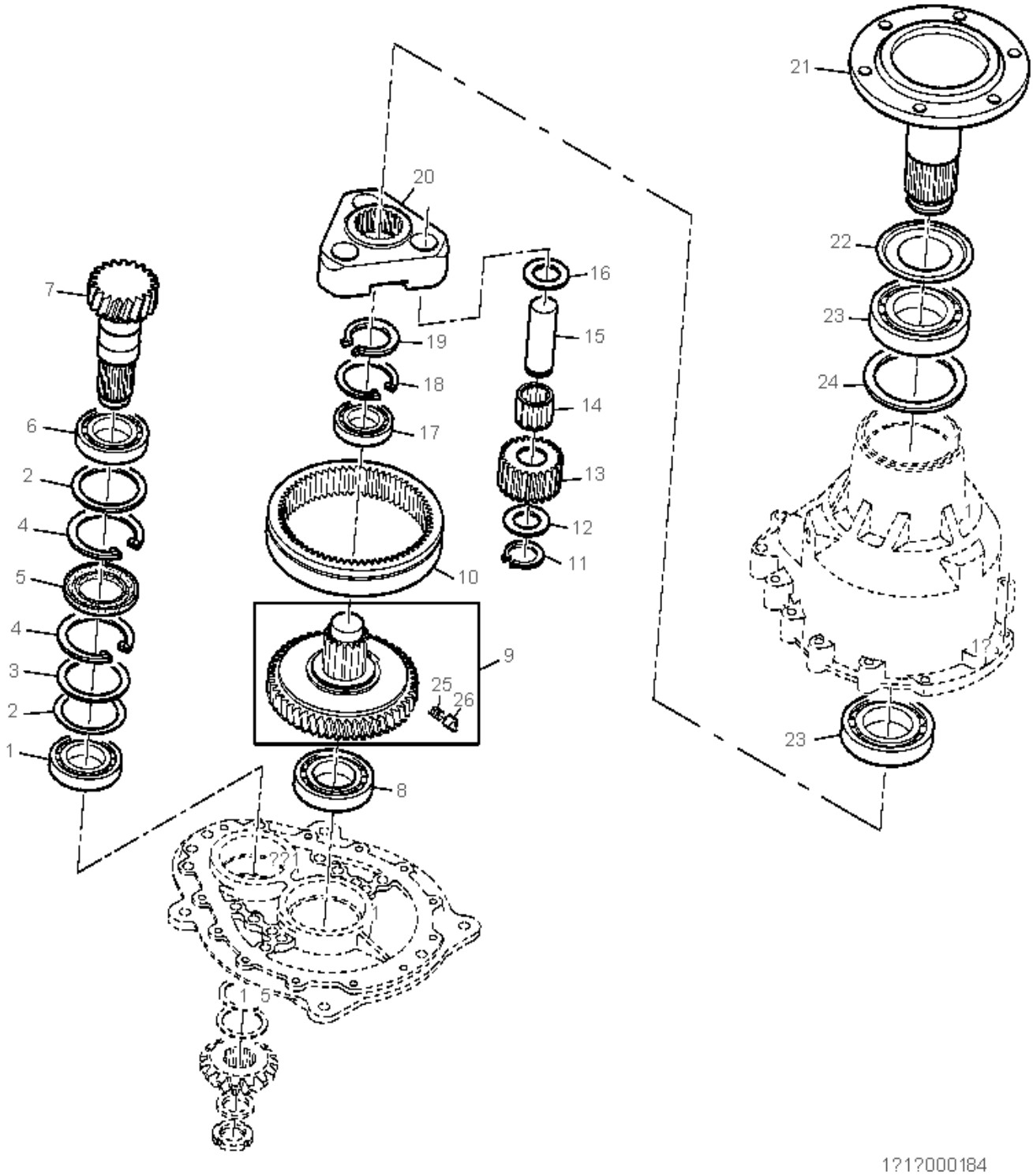

Helical spur gear LCA122200/01 (KM000184)

Item no.	Article no.	Description	Quantity	remarks
1	LCA05117	TAPERED ROLLER BEARING	1	
2	24M7594	WASHER	2	
3	24M4813	SHIM	AR	TK = 1.0 mm
3	24M7219	SHIM	AR	TK = 0,1 mm
3	24M7221	SHIM	AR	TK = 0,3 mm
3	24M7201	SHIM	AR	TK = 0,5 mm
4	40M1868	SNAP RING	2	
5	LCA91710	SEAL	1	
6	LCA27672	TAPERED ROLLER BEARING	1	
7	LCA87748	PINION SHAFT	1	
8	07066	BALL BEARING	1	
9	LCA110384	RATCHET	1	
10	LCA90096	SPUR GEAR	1	NSEP ORD LCA122199
11	40M7011	SNAP RING	3	
12	LCA91709	WASHER	3	
13	LCA90095	SPUR GEAR	3	
14	LCA55577	NEEDLE BEARING	3	
15	LCA87746	PIN FASTENER	3	
16	JD39125	WASHER	3	
17	LCA13009	BALL BEARING	1	
18	40M1866	SNAP RING	1	
19	40M7014	SNAP RING	1	
20	LCA87744	PLANET PINION CARRIER	1	
21	LCA91723	SHAFT	1	
22	LCA91714	SEALING WASHER	1	
23	12740	BALL BEARING	2	
24	24M7516	SHIM	1	
25	LCA13224	COMPRESSION SPRING	AR	
26	LCA56102	CAM	AR	
.....	LCA122199	KIT	1	Gehäuse und Hohlrad

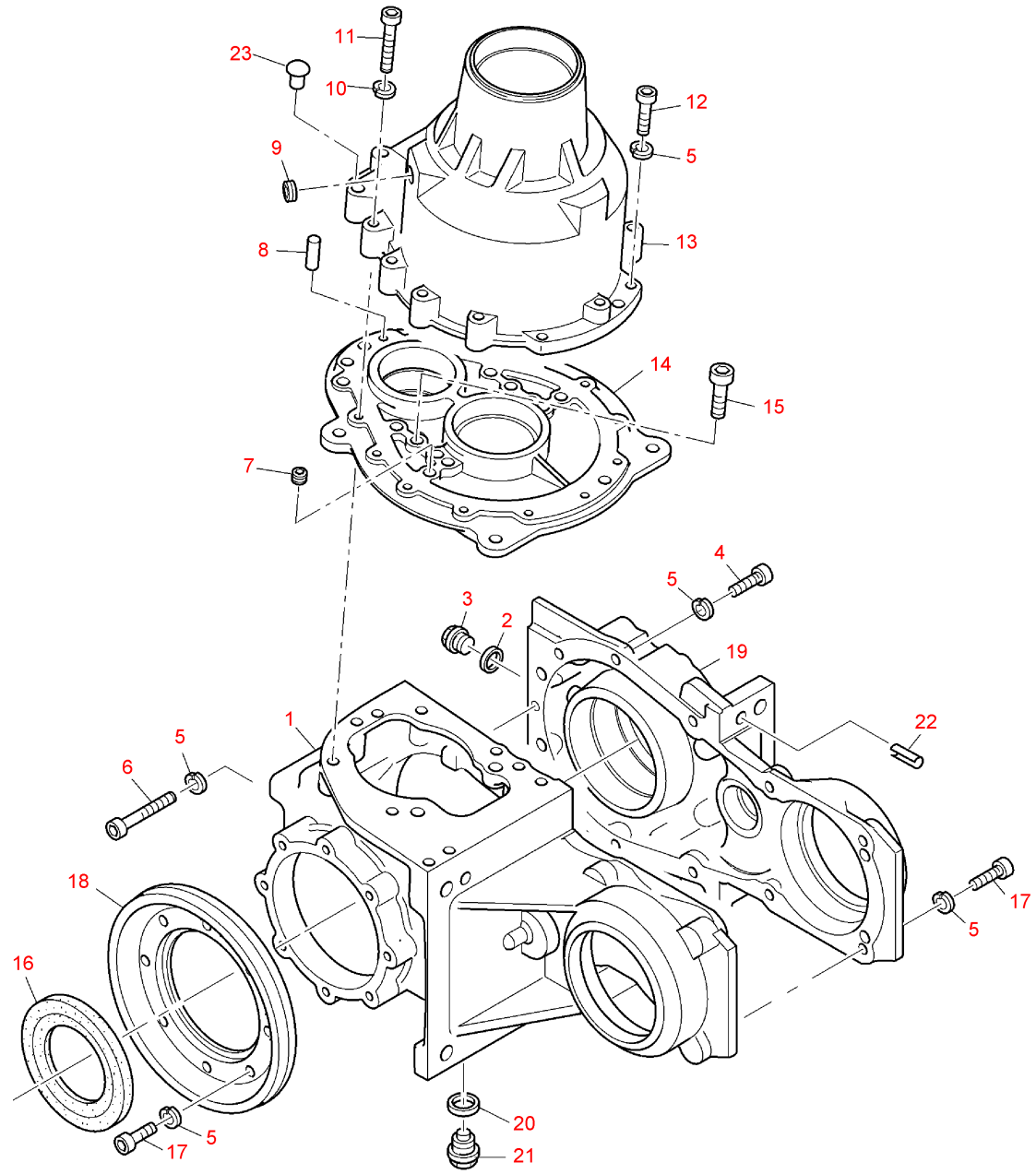

KM001871

TRANSMISSION LCA122201 (KM001871)

Item no.	Article no.	Description	Quantity	remarks
1	LCA88516	HOUSING	1	
2	37848	SEALING RING	1	
3	LCA59408	FITTING PLUG	1	
4	19M9740	BOLT	AR	M8x35
5	LCA57540	LOCK WASHER	AR	
6	19M8658	BOLT	1	M8x60
7	22M7113	SCREW	1	
8	44M7152	DOWEL PIN	1	
9	15M7091	FITTING PLUG	1	
10	LCA40940	LOCK WASHER	8	
11	19M8676	BOLT	3	M10x65
12	19M9741	BOLT	9	M8x45
13	LCA88519	HOUSING	1	NSEP ORD LCA122199
14	LCA88517	HOUSING	1	
15	19M9706	BOLT	6	M10x35
16	LCA91713	SEAL	1	
17	19M9739	BOLT	AR	M8x30
18	LCA91722	COVER	1	
19	LCA91724	HOUSING	1	
20	LCA03435	SEALING RING	1	
21	LCA59521	SCREW	1	
22	LCA91704	SPRING PIN	5	
23	LCA13976	VALVE	1	
.....	LCA122199	KIT	1	Gehäuse und Hohlrad

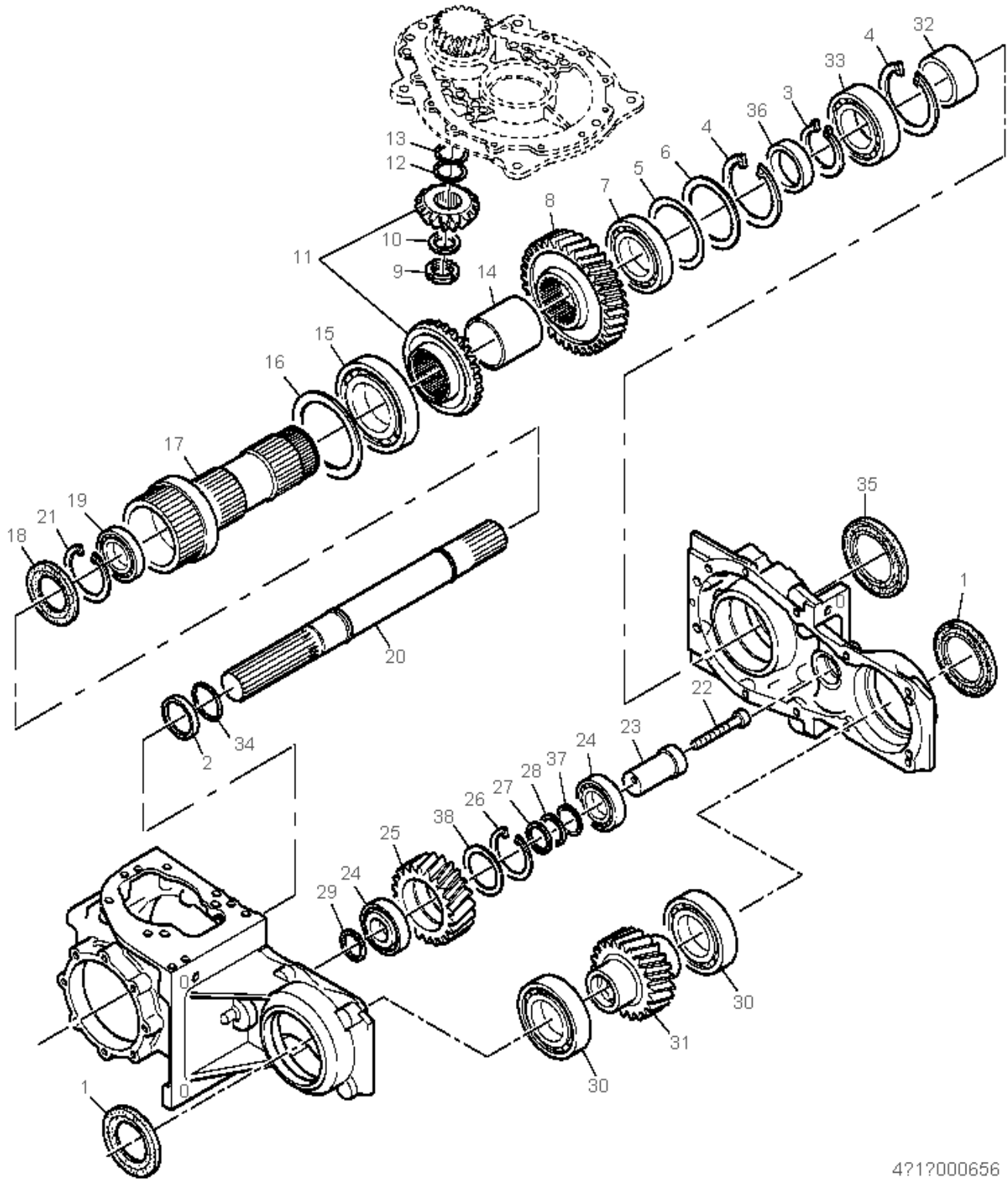
32
4
33
3
36
4
6
5
7
8
13
12
10
11
9
14
15
16
17
19
21
18
20
35
1
22
23
24
37
28
27
26
38
25
24
29
30
31
30
1
2
34
4?1?000656

Helical spur gear LCA122201 (KM000656)

Item no.	Article no.	Description	Quantity	remarks
1	LCA94239	SEAL	2	
2	LCA90092	SPACER	1	
3	40M1841	SNAP RING	1	
4	40M1873	SNAP RING	2	
5	LCA98500	SPACER	1	
6	24M7154	SHIM	AR	TK = 0,1 mm
6	24M7168	SHIM	AR	TK = 0,3 mm
6	24M7576	SHIM	AR	TK = 0,5 mm
7	LCA46097	TAPERED ROLLER BEARING	1	
8	LCA98490	SPUR GEAR	1	
9	LCA29076	NUT	1	
10	24M7375	WASHER	1	
11	LCA91735	BEVEL GEAR DRIVE	1	
12	24M7199	SHIM	AR	TK = 0,5 mm
12	24M7304	SHIM	AR	TK = 0,3 mm
12	24M7305	SHIM	AR	TK = 0,1 mm
13	24M7303	SHIM	1	
14	LCA98491	SPACER	1	
15	LCA58688	BALL BEARING	1	
16	24M7165	SHIM	AR	TK = 0,1 mm
16	24M7575	SHIM	AR	TK = 0,3 mm
16	LCA62761	SHIM	AR	TK = 0,5 mm
17	LCA98492	SHAFT	1	
18	LCA91711	SEAL	1	
19	LCA36868	BALL BEARING	2	
20	LCA91725	SHAFT	1	
21	40M5546	SNAP RING	1	
22	19M7604	BOLT	1	M8x80
23	LCA87842	PIN FASTENER	1	
24	LCA65598	TAPERED ROLLER BEARING	2	
25	LCA87841	SPUR GEAR	1	
26	40M1868	SNAP RING	1	
27	LCA69672	WASHER	1	
28	LCA69673	KIT	1	
29	24M7536	WASHER	1	
30	LCA27946	BALL BEARING	2	

Helical spur gear LCA122201 (KM000656)

Item no.	Article no.	Description	Quantity	remarks
31	LCA87749	SPUR GEAR	1	
32	LCA91726	BEARING RACE	1	
33	LCA05377	BALL BEARING	1	
34	69796	SEAL	1	
35	LCA91712	SEAL	1	
36	LCA98499	SPACER	1	
37	LCA98501	SHIM	1	TK = 1.0 mm
38	24M4813	SHIM	1	

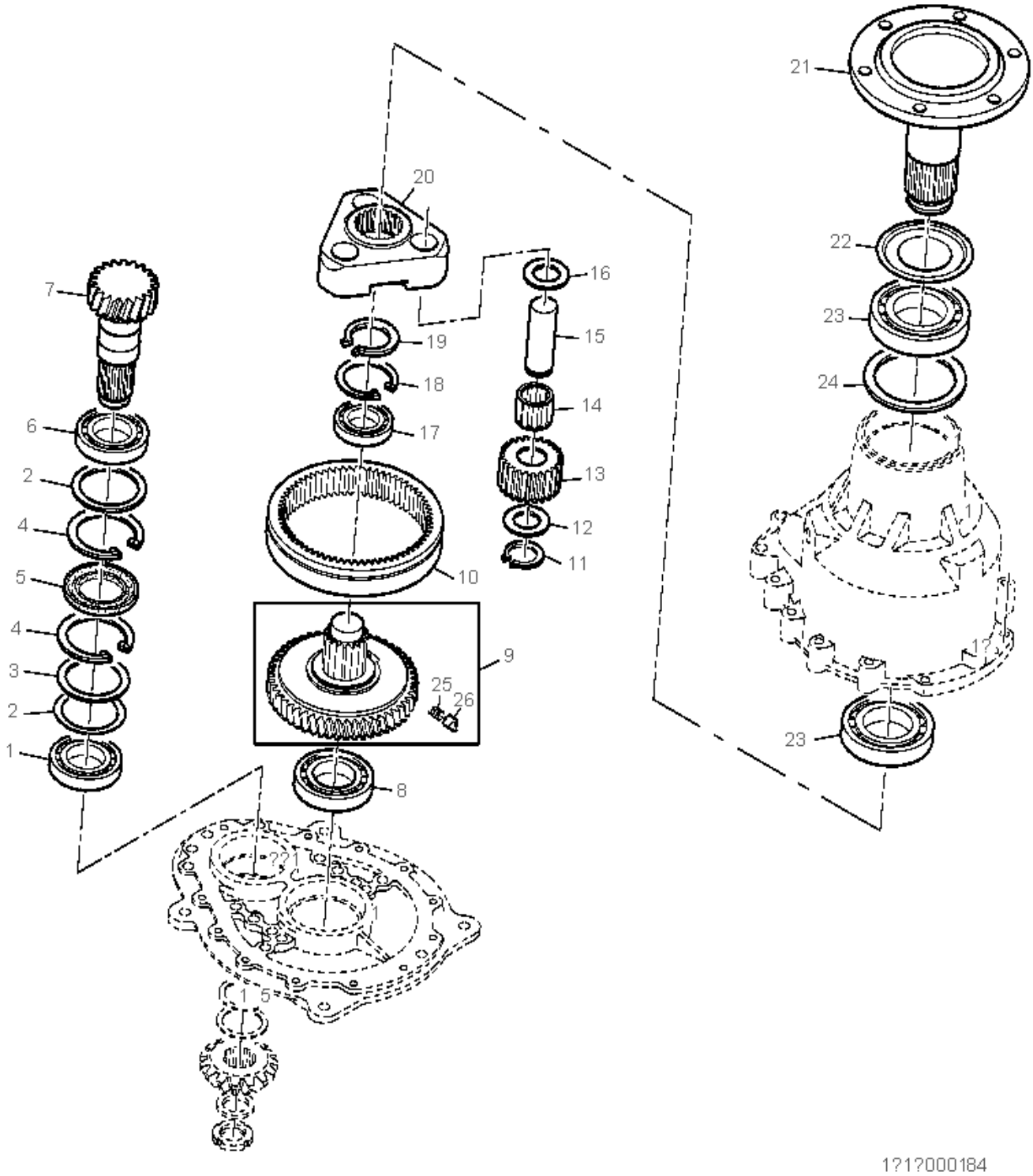
1?1?000184

Helical spur gear LCA122200/01 (KM000184)

Item no.	Article no.	Description	Quantity	remarks
1	LCA05117	TAPERED ROLLER BEARING	1	
2	24M7594	WASHER	2	
3	24M4813	SHIM	AR	TK = 1.0 mm
3	24M7219	SHIM	AR	TK = 0,1 mm
3	24M7221	SHIM	AR	TK = 0,3 mm
3	24M7201	SHIM	AR	TK = 0,5 mm
4	40M1868	SNAP RING	2	
5	LCA91710	SEAL	1	
6	LCA27672	TAPERED ROLLER BEARING	1	
7	LCA87748	PINION SHAFT	1	
8	07066	BALL BEARING	1	
9	LCA110384	RATCHET	1	
10	LCA90096	SPUR GEAR	1	NSEP ORD LCA122199
11	40M7011	SNAP RING	3	
12	LCA91709	WASHER	3	
13	LCA90095	SPUR GEAR	3	
14	LCA55577	NEEDLE BEARING	3	
15	LCA87746	PIN FASTENER	3	
16	JD39125	WASHER	3	
17	LCA13009	BALL BEARING	1	
18	40M1866	SNAP RING	1	
19	40M7014	SNAP RING	1	
20	LCA87744	PLANET PINION CARRIER	1	
21	LCA91723	SHAFT	1	
22	LCA91714	SEALING WASHER	1	
23	12740	BALL BEARING	2	
24	24M7516	SHIM	1	
25	LCA13224	COMPRESSION SPRING	AR	
26	LCA56102	CAM	AR	
.....	LCA122199	KIT	1	Gehäuse und Hohlrad

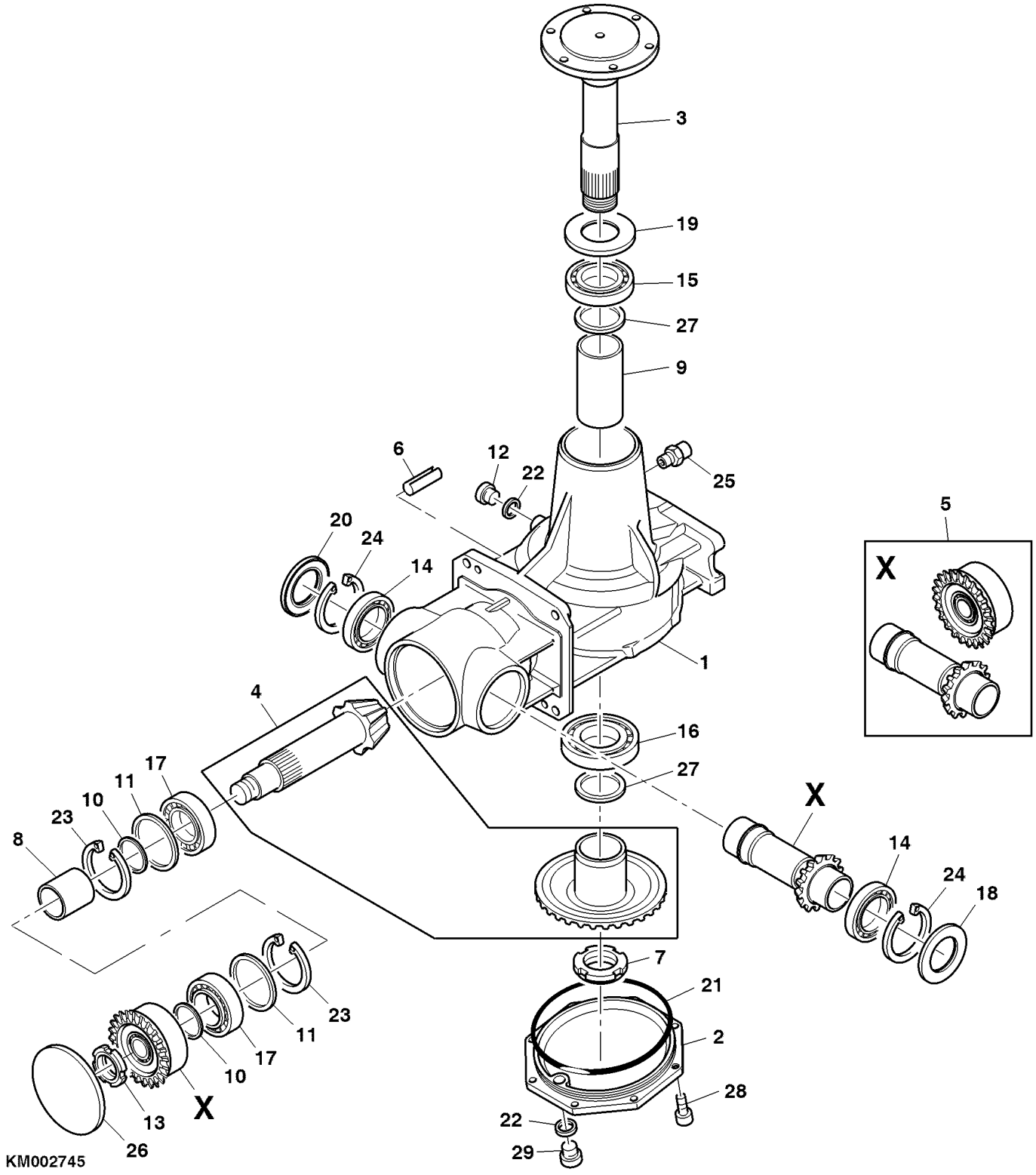
3
19
15
27
9
6
12
22
25
20
24
14
5
X
1
4
16
27
17
11
10
23
8
X
14
24
18
7
21
2
28
22
29
23
11
17
10
X
13
26
KM002745

Right-angle gear for transverse transport drum (KM002745)

Item no.	Article no.	Description	Quantity	remarks
1	LCA109428	HOUSING	1	
2	LCA109435	COVER	1	
3	LCA134708	SHAFT	1	
4	LCA134710	BEVEL GEAR DRIVE	1	
5	LCA134709	Spur Pinion Hollow Shaft+Slip Clutch	1	
6	LCA91704	SPRING PIN	2	
7	LCA109436	NUT	1	
8	LCA109427	SPACER	1	
9	LCA109434	SPACER	1	
10	LCA110365	SHIM	2	
11	LCA110366	SHIM	2	
12	11811	FITTING PLUG	1	
13	LCA29076	NUT	1	
14	LCA50715	BALL BEARING	2	
15	LCA32048	BALL BEARING	1	
16	LCA05119	TAPERED ROLLER BEARING	1	
17	29820	TAPERED ROLLER BEARING	2	
18	LCA65148	SEAL	1	
19	LCA68557	SEAL	1	
20	LCA86868	SEAL	1	
21	LCA113718	O-RING	1	
22	05812	SEALING RING	2	
23	40M7335	SNAP RING	2	
24	40M1871	SNAP RING	2	
25	LCA82131	VALVE	1	
26	LCA114025	CAP	1	
27	LCA110367	SHIM	1	
28	19M9736	BOLT	8	M8x16
29	LCA71120	FITTING PLUG	1	

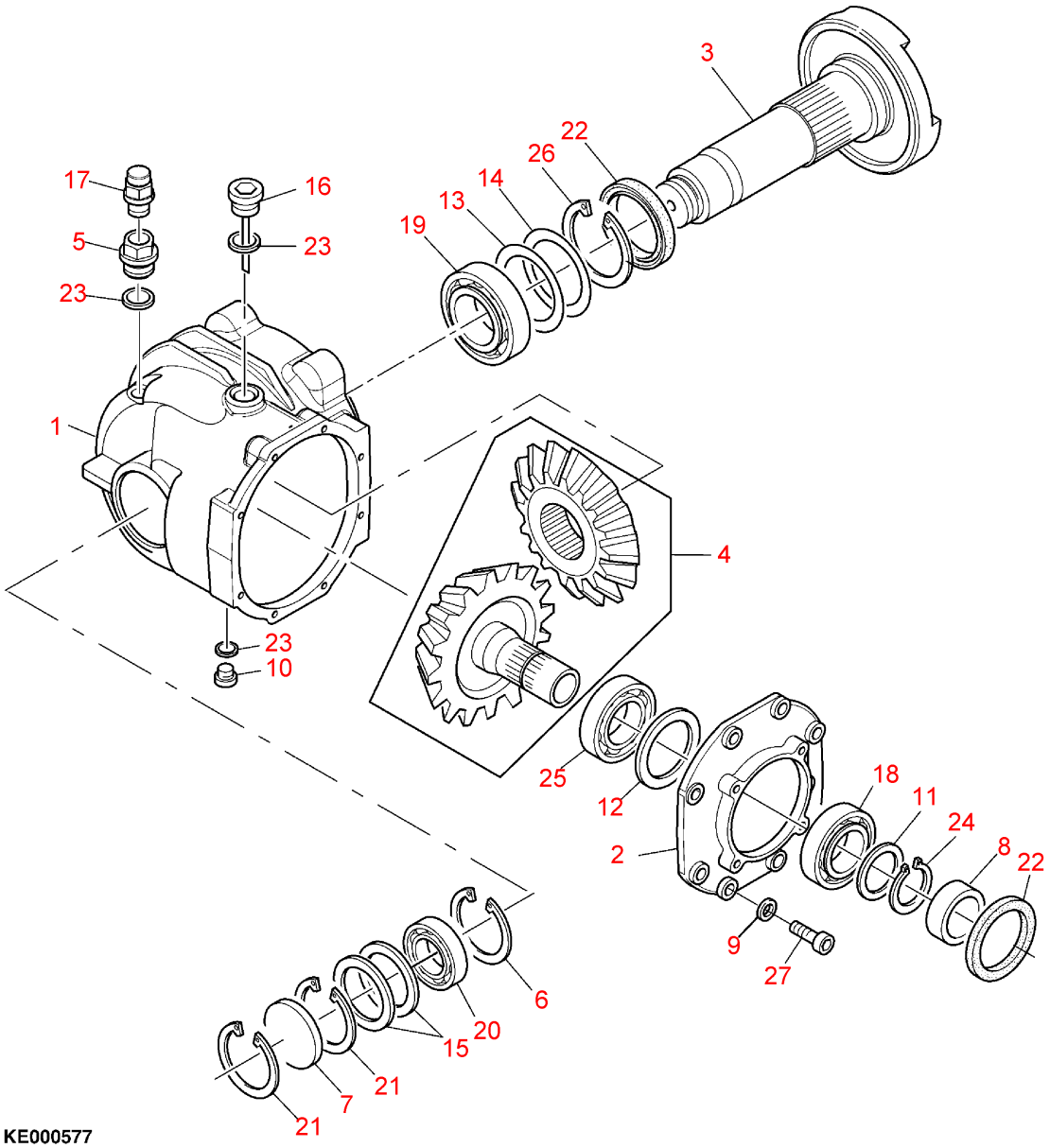
3
22
26
14
13
19
17
16
5
23
23
1
4
23
10
25
12
18
11
24
8
22
2
9
27
6
20
15
21
7
21

KE000577

Right-angle gear CLAAS Multispeed (KE000577)

Item no.	Article no.	Description	Quantity	remarks
1	LCA110432	CASE	1	
2	LCA110433	COVER	1	
3	LCA110396	DRIVE SHAFT	1	
4	LCA110434	BEVEL GEAR DRIVE	1	Z = 20 / 20
5	LCA86768	FITTING PLUG	1	
6	40M7302	SNAP RING	1	
7	LCA98107	CAP	1	
8	LCA98512	BEARING RACE	1	
9	LCA110435	WASHER	8	
10	LCA63274	FITTING PLUG	1	
11	LCA75142	WASHER	1	
12	LCA110358	WASHER	1	
13	57067	SHIM	AR	
14	LCA67354	SHIM	AR	
15	LCA110359	WASHER	2	
16	LCA110431	SCREW	1	
17	LCA82131	VALVE	1	
18	LCA27696	TAPERED ROLLER BEARING	1	
19	LCA05119	TAPERED ROLLER BEARING	1	
20	LCA27671	TAPERED ROLLER BEARING	1	
21	LCA98109	SNAP RING	1	
22	LCA98108	SEAL	2	
23	LCA03435	SEALING RING	3	
24	40M7027	SNAP RING	1	
25	LCA46097	TAPERED ROLLER BEARING	1	
26	LCA35964	SNAP RING	1	
27	19M9705	BOLT	8	M10x30

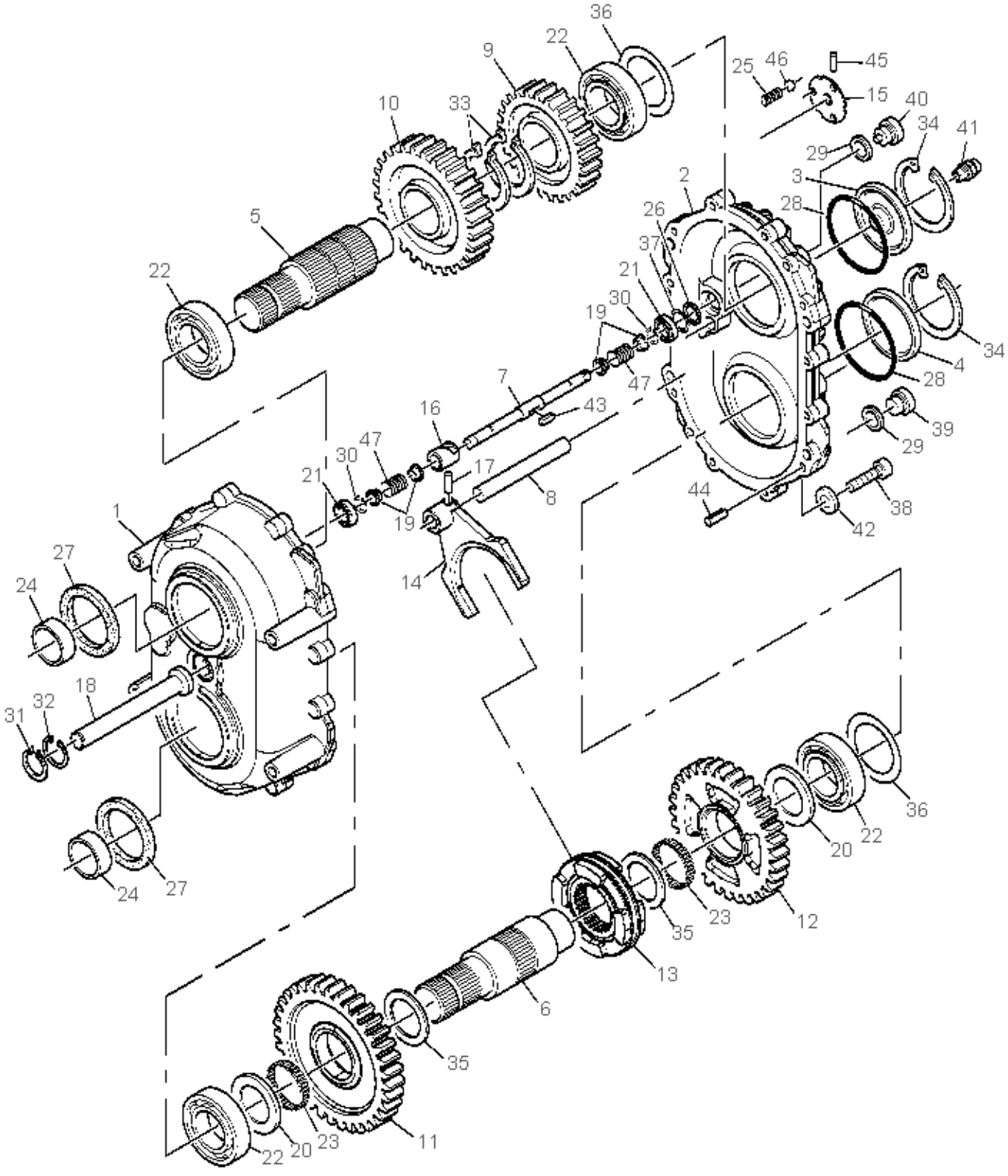
36
22
9
25
46
45
15
40
34
41
10
33
29
3
2
28
26
5
37
21
22
30
19
34
4
28
47
7
43
16
39
29
47
30
17
21
8
44
38
19
42
1
27
14
24
18
32
31
36
22
20
24
27
23
12
35
13
6
35
11
22
20
23

KE000499

Item no.	Article no.	Description	Quantity	remarks
1	LCA109453	HOUSING	1	
2	LCA109454	COVER	1	
3	LCA109455	COVER	1	
4	LCA109456	COVER	1	
5	LCA110327	SHAFT	1	
6	LCA110328	SHIFTER ROD	1	
7	LCA110329	SHIFTER ROD	1	
8	LCA110330	SHAFT	1	
9	LCA110392	PINION	1	Z = 27
10	LCA110393	PINION	1	Z = 29
11	LCA110394	GEAR	1	Z = 31
12	LCA110395	GEAR	1	Z = 34
13	LCA110335	SHIFT COLLAR	1	
14	LCA110336	SHIFTER	1	
15	LCA110337	NUT	1	
16	LCA110338	BUSHING	1	
17	LCA110339	PIN FASTENER	1	
18	LCA110340	PIN FASTENER	1	
19	LCA110341	BUSHING	4	
20	LCA110342	THRUST WASHER	2	
21	LCA98110	BALL BEARING	2	
22	LCA27696	TAPERED ROLLER BEARING	4	
23	LCA98111	NEEDLE BEARING	2	
24	LCA98112	BEARING RACE	2	
25	LCA05680	BALL	1	
26	LCA98113	SEAL	1	
27	LCA86868	SEAL	2	
28	LCA91697	O-RING	2	
29	LCA03435	SEALING RING	2	
30	LCA98114	SNAP RING	2	
31	40M1825	SNAP RING	1	
32	40M1856	SNAP RING	1	
33	40M7268	SNAP RING	2	
34	40M1872	SNAP RING	2	
35	24M7594	WASHER	2	
36	57065	SHIM	2	

Item no.	Article no.	Description	Quantity	remarks
37	LCA98115	Ball bearing compensation washer	1	
38	19M9951	BOLT	12	M8x40
39	LCA11657	FITTING PLUG	1	
40	LCA63274	FITTING PLUG	1	
41	LCA82131	VALVE	1	
42	12M7056	LOCK WASHER	12	
43	LCA98116	SHAFT KEY	1	
44	57931	SPRING PIN	2	
45	LCA98117	SPRING PIN	1	
46	LCA52259	COMPRESSION SPRING	1	
47	LCA98118	COMPRESSION SPRING	2	

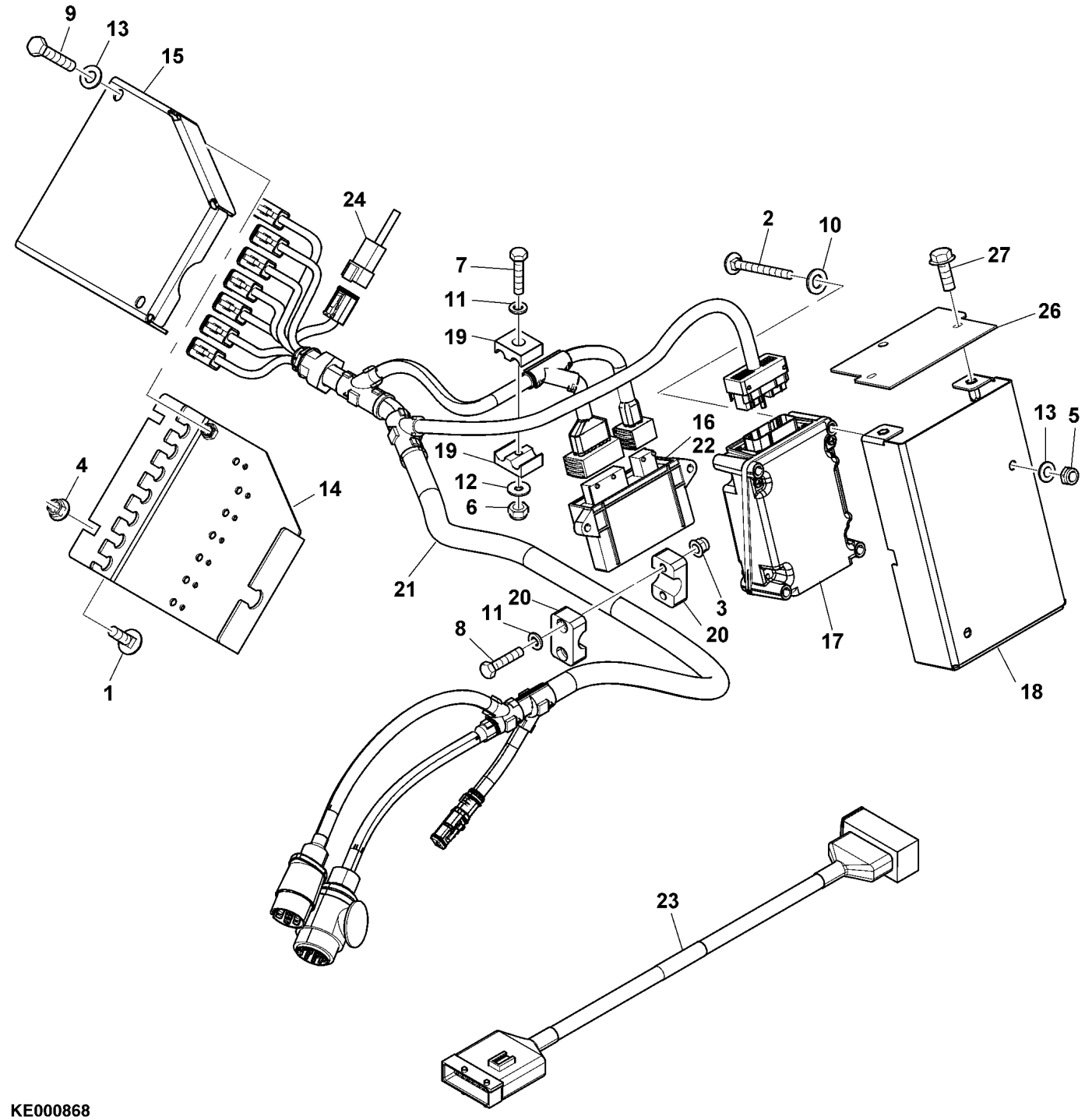
9
13
15
24
2
10
27
7
11
19
26
13
5
16
22
19
12
6
4
14
21
3
20
11
20
8
17
18
1
23

KE000868

MAIN WIRING HARNESS (KE000868)

Item no.	Article no.	Description	Quantity	remarks
1	19M7784	CAP SCREW	1	M10x20
2	03M7407	SCREW	2	M8x80
3	14M7397	NUT	2	M6
4	14M7629	NUT	2	M20
5	14M7659	NUT	2	M8
6	14M7668	NUT	1	M6
7	19M9620	CAP SCREW	1	M6x45
8	19M9621	CAP SCREW	2	M6x50
9	19M9629	CAP SCREW	2	M8x50
10	24M7491	WASHER	2	
11	24M7506	WASHER	3	
12	24M7507	WASHER	1	
13	24M7509	WASHER	2	
14	LCA136830	BRACKET	1	
15	LCA119716	SHEET	1	
16	LCA119824	CONTROLLER	1	(A)
17	LCA119825	CIRCUIT BOX	1	
18	LCA130233	BRACKET	1	
19	LCA79185	CLAMP	2	
20	LCA118371	BLOCK CLAMP	2	
21	LCA121325	WIRING HARNESS	1	
22	LCA106383	KIT	1	(B)
23	LCA120048	ADAPTER FITTING	1	(B)
24	LCA122130	PLUG	1	Bei Lenkhilfe Kemper
24	LCA122131	PLUG	1	Bei Lenkhilfe Claas
26	LCA130202	SHEET	1	
27	19M9444	CAP SCREW	2	M6x20
		(A) Without Support Wheel		
		(B) With Support Wheel		

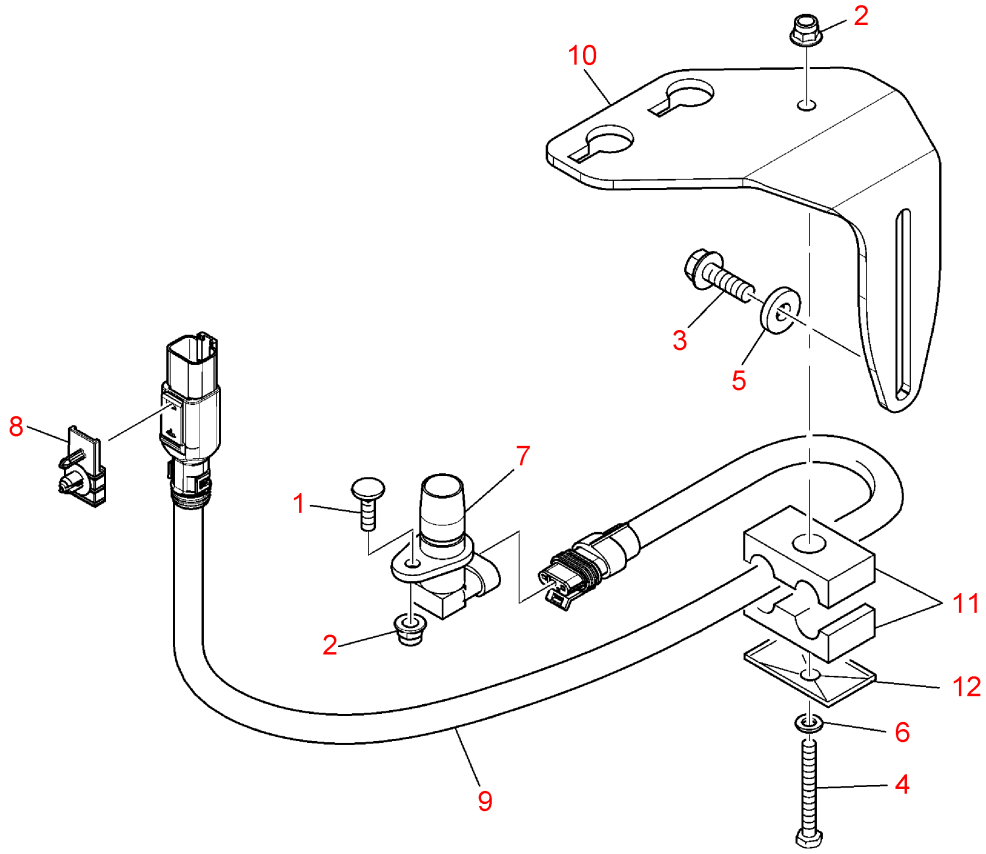

KE000582

SENSOR (KE000582)

Item no.	Article no.	Description	Quantity	remarks
1	03M7222	BOLT	1	M6x20
2	14M7397	NUT	2	M6
3	19M9569	CAP SCREW	2	M8x25
4	19M9621	CAP SCREW	1	M6x50
5	24M7476	WASHER	2	
6	24M7506	WASHER	1	
7	LCA106245	ADAPTER KIT	1	
8	LCA111943	Elec.Control Locking Device	1	
9	LCA119845	WIRING HARNESS	1	
10	LCA119871	RETAINER	1	
11	LCA79185	CLAMP	1	
12	LCA83295	PLATE	1	

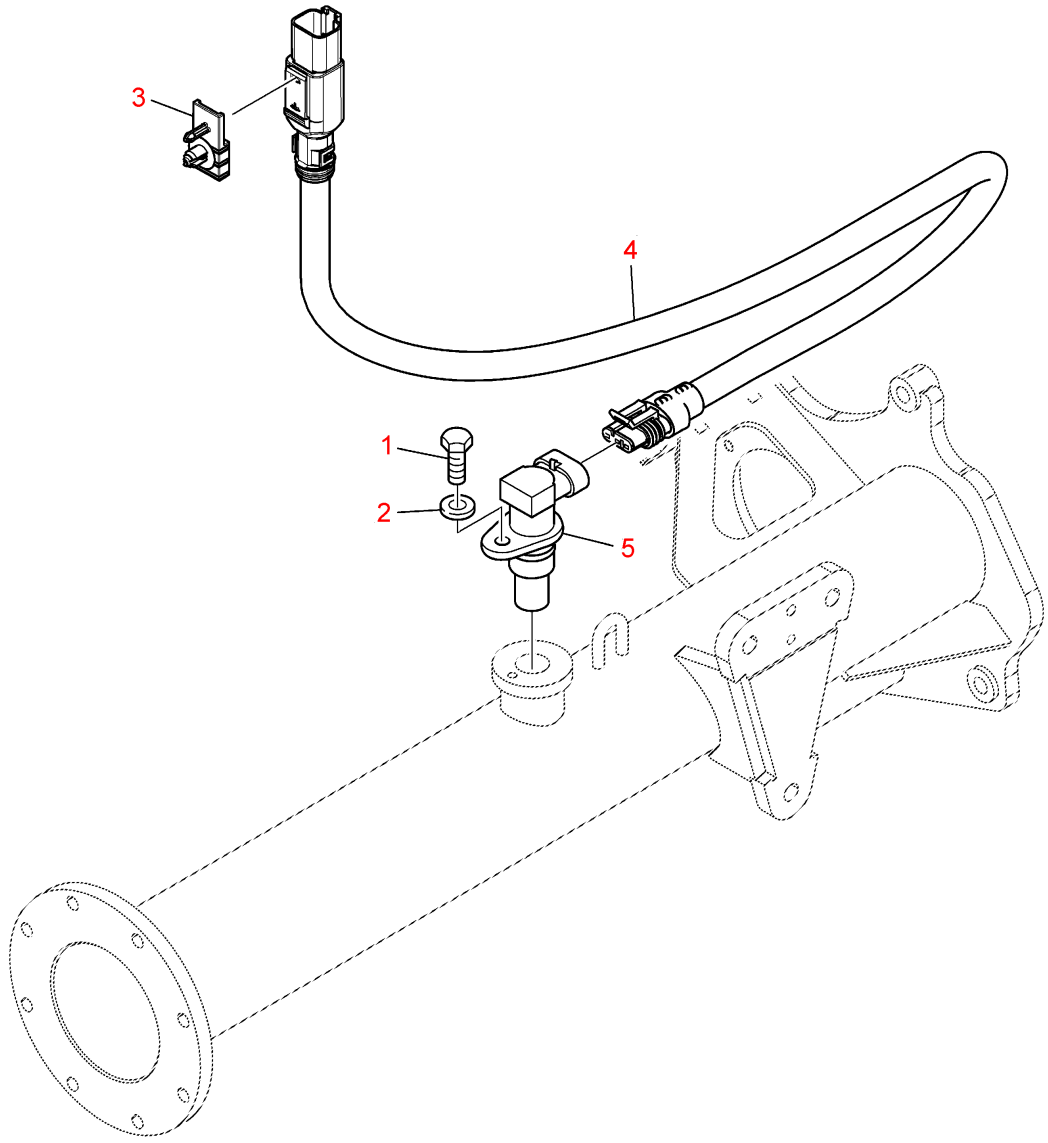

KE000583

SENSOR (KE000583)

Item no.	Article no.	Description	Quantity	remarks
1	19M9674	CAP SCREW	1	M6x12
2	LCA90841	LOCK WASHER	1	
3	LCA111943	Elec.Control Locking Device	1	
4	LCA119843	WIRING HARNESS	1	
5	LCA121350	SENSOR	1	

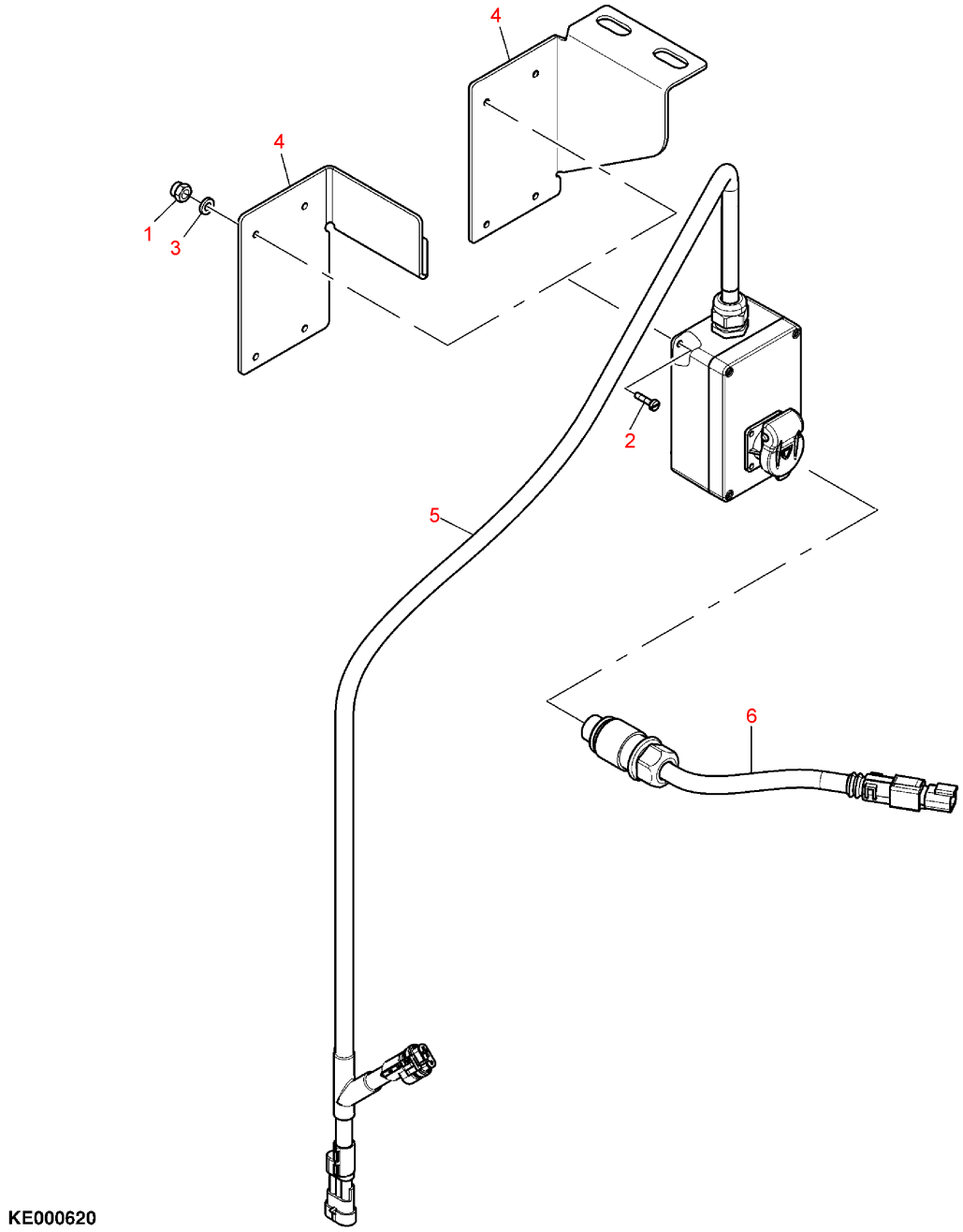

KE000620

WIRING HARNESS SPFH (KE000620)

Item no.	Article no.	Description	Quantity	remarks
1	14M7671	NUT	4	M4
2	21M7588	SCREW	4	M4x16
3	24M7501	WASHER	4	
4	LCA119726	SHEET	1	
4	LCA122151	SHEET	1	
5	LCA120040	WIRING HARNESS	1	
6	LCA120041	WIRING HARNESS	1	
.....	LCA120043	WIRING HARNESS	1	ASSY

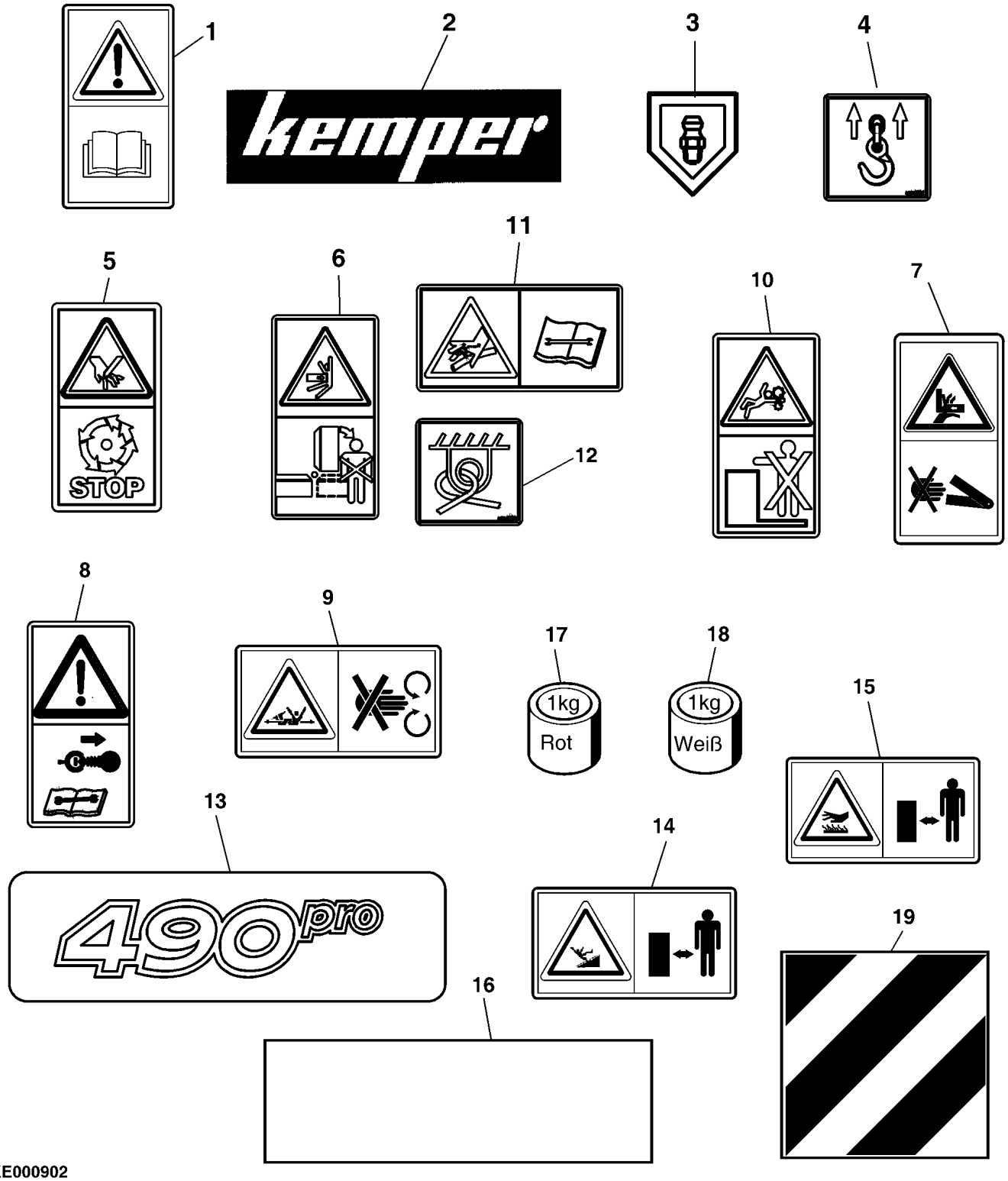
1
2
kemper
3
4
5
STOP
6
11
12
10
7
8
9
17
1kg
Rot
18
1kg
Weiß
15
13
490pro
14
16
19

KE000902

LABELS (KE000902)

Item no.	Article no.	Description	Quantity	remarks
1	CC40740	LABEL	1	
2	LCA128329	LABEL	3	
3	LCA30843	LABEL	11	
4	LCA53616	LABEL	4	
5	LCA66505	LABEL	2	
6	LCA66507	LABEL	4	
7	LCA68600	LABEL	4	
8	LCA68622	LABEL	1	
9	LCA101614	SAFETY SIGN	1	
10	LCA73056	LABEL	2	
11	LCA102139	LABEL	1	
12	LCA108110	LABEL	4	
13	LCA131401	LABEL	2	
14	Z60640	LABEL	2	
15	Z59871	LABEL	1	
16	LCA112005	SAFETY SIGN	2	
17	LCA01547	PAINT	AR	red
18	LCA48312	PAINT	AR	white
19	LCA101947	SAFETY SIGN	2	(A)

(A) For France only

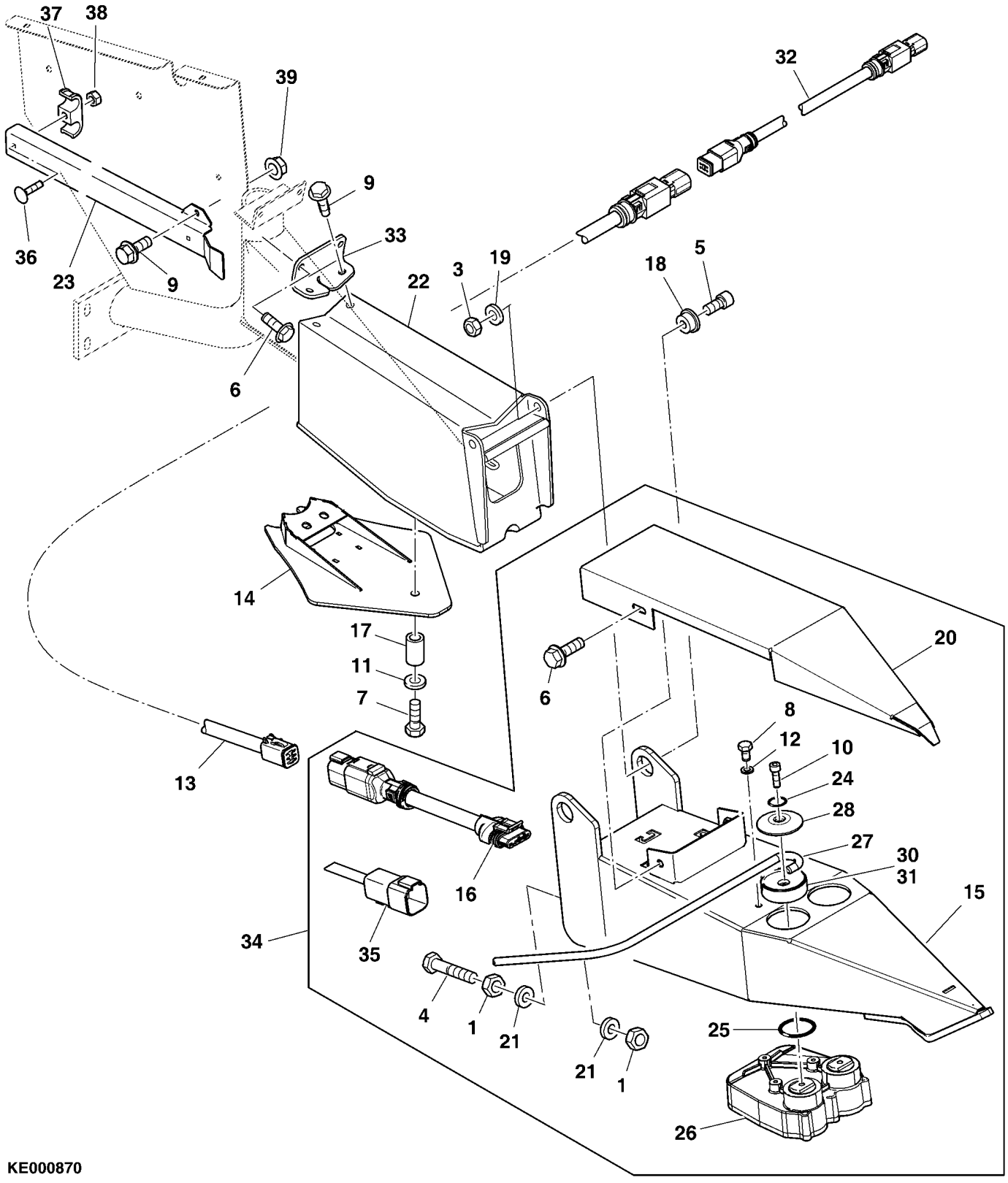
37
38
39
32
9
33
36
23
9
3
19
18
5
22
6
14
17
11
7
6
20
8
12
10
24
28
27
30
31
15
13
16
34
35
4
1
21
21
1
25
26

KE000870

Item no.	Article no.	Description	Quantity	remarks
1	14M7616	NUT	2	M16
3	14M7662	NUT	2	M12
4	19M10139	CAP SCREW	1	M16x90
5	19M9553	BOLT	2	M12x25
6	19M9569	CAP SCREW	4	M8x25
7	19M9647	CAP SCREW	1	M12x25
8	19M9674	CAP SCREW	2	M6x12
9	19M9261	CAP SCREW	5	M8x20
10	.....		2	Claas 0002354881
11	24M7491	WASHER	1	
12	24M7506	WASHER	2	
13	LCA117668	WIRING HARNESS	1	
14	LCA128050	GUIDE	1	
15	129265	GATHERER POINT	1	
16	LCA121648	ADAPTER FITTING	1	
17	LCA59390	TUBE	1	
18	LCA66147	BUSHING	2	
19	LCA72740	LOCK WASHER	2	
20	135274	GATHERER POINT	1	
21	LCA89595	LOCK WASHER	2	
22	134056	SUPPORT	1	
23	LCA134059	SHEET	1	
24	.....		2	Claas 0002157120
25	.....		2	Claas 0003646270
26	.....		1	Claas 0003834241
27	.....		2	Claas 0003834871
28	.....		2	Claas 0003837320
30	.....		1	Claas 0003837331
31	.....		1	Claas 0003837342
32	LCA115771	WIRING HARNESS	1	
33	98957	RETAINER	1	
34	121647	SENSOR	1	
35	LCA122131	PLUG	1	
36	03M7232	BOLT	3	M6x25
37	Z44220	BLOCK CLAMP	3	
38	14M7622	NUT	3	M6

Item no.	Article no.	Description	Quantity	remarks
39	14M7298	Flange Nut	1	M8

AUTOMATIC HEADER CONTROL (AHC) (KE000589)

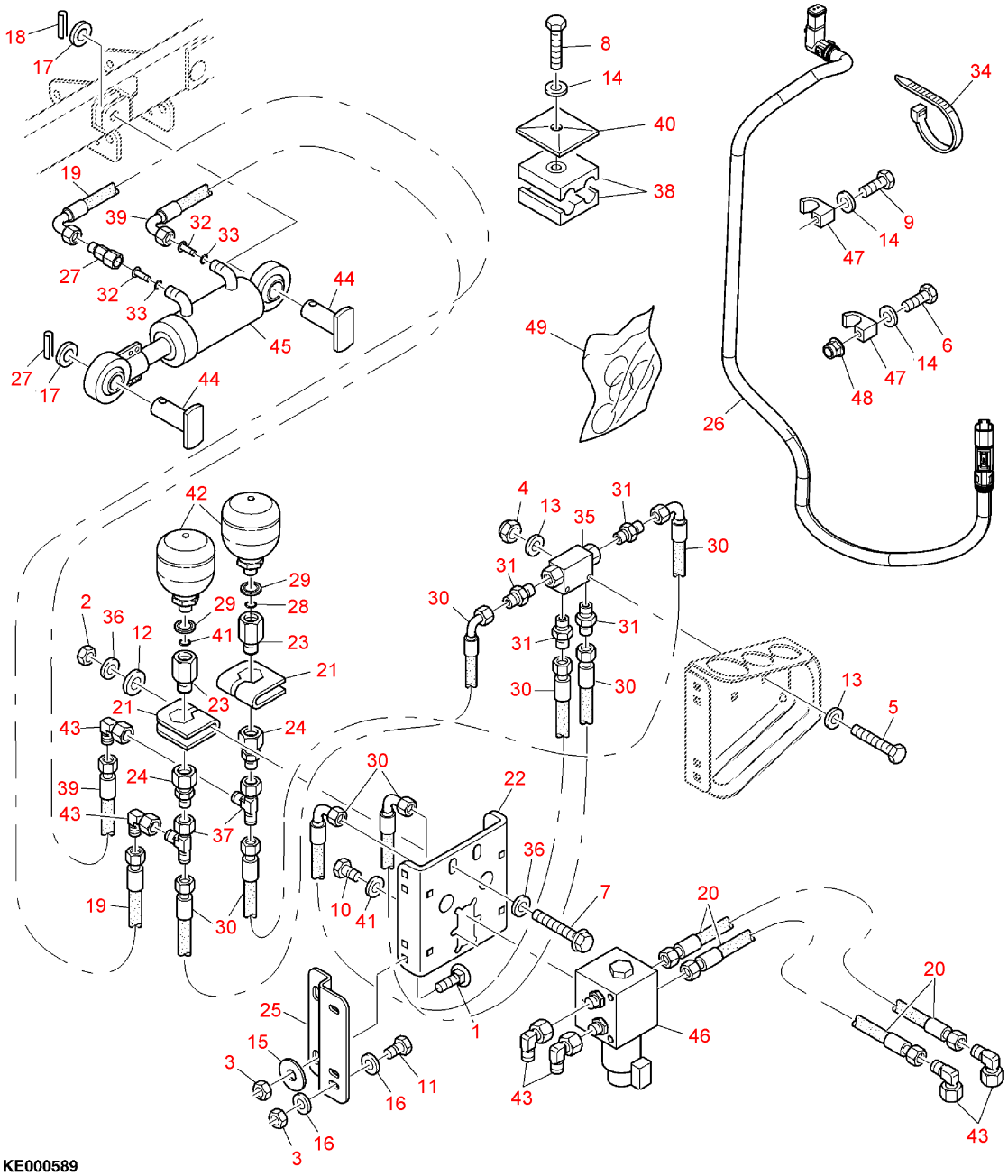

AUTOMATIC HEADER CONTROL (AHC) (KE000589)

Item no.	Article no.	Description	Quantity	remarks
1	03M7404	BOLT	2	M8x20
2	14M7614	NUT	2	M10
3	14M7659	NUT	4	M8
4	14M7663	NUT	2	M5
5	19M10045	SCREW	2	M5x50
6	19M10112	CAP SCREW	1	M6x35
7	19M10217	CAP SCREW	2	M10x70
8	19M9620	CAP SCREW	AR	M6x45
9	19M9677	CAP SCREW	2	M6x25
10	19M9681	CAP SCREW	2	M8x16
11	19M9684	CAP SCREW	2	M8x30
12	24M7477	WASHER	4	
13	24M7502	WASHER	3	
14	24M7506	WASHER	AR	
15	24M7508	WASHER	2	
16	24M7509	WASHER	4	
17	24M7540	WASHER	2	
18	34M7312	SPRING PIN	2	
19	LCA102086	HYDRAULIC HOSE	1	
20	LCA102088	HYDRAULIC HOSE	2	
21	LCA103633	RETAINER	2	
22	LCA103634	RETAINER	1	
23	LCA104145	UNION FITTING	2	
24	LCA104146	Fitting	2	
25	LCA107485	SHEET	1	
26	LCA107843	WIRING HARNESS	1	
27	LCA107844	FITTING	1	
28	LCA109992	O-RING	2	
29	LCA109993	RING	2	
30	LCA40152	HYDRAULIC HOSE	4	
31	LCA40165	FITTING	4	
32	LCA40176	RESTRICTOR	2	
33	LCA40287	O-RING	2	
34	LCA44646	TIE BAND	AR	
35	LCA67042	VALVE	1	
36	LCA71878	LOCK WASHER	4	

Item no.	Article no.	Description	Quantity	remarks
37	LCA74847	UNION FITTING	2	
38	LCA79185	CLAMP	2	
39	LCA79932	HYDRAULIC HOSE	1	
40	LCA83295	PLATE	2	
41	LCA84221	LOCK WASHER	AR	
42	LCA86212	PNEUMATIC ACCUMULATOR	2	
43	LCA88402	UNION FITTING	6	
44	LCA90825	PIN FASTENER	2	
45	LCA92636	HYDRAULIC CYLINDER	1	
46	LCA99799	VALVE	1	
47	Z34952	BLOCK CLAMP	5	
48	14M7397	NUT	1	M6
49	LCA86960	GASKET KIT	1	

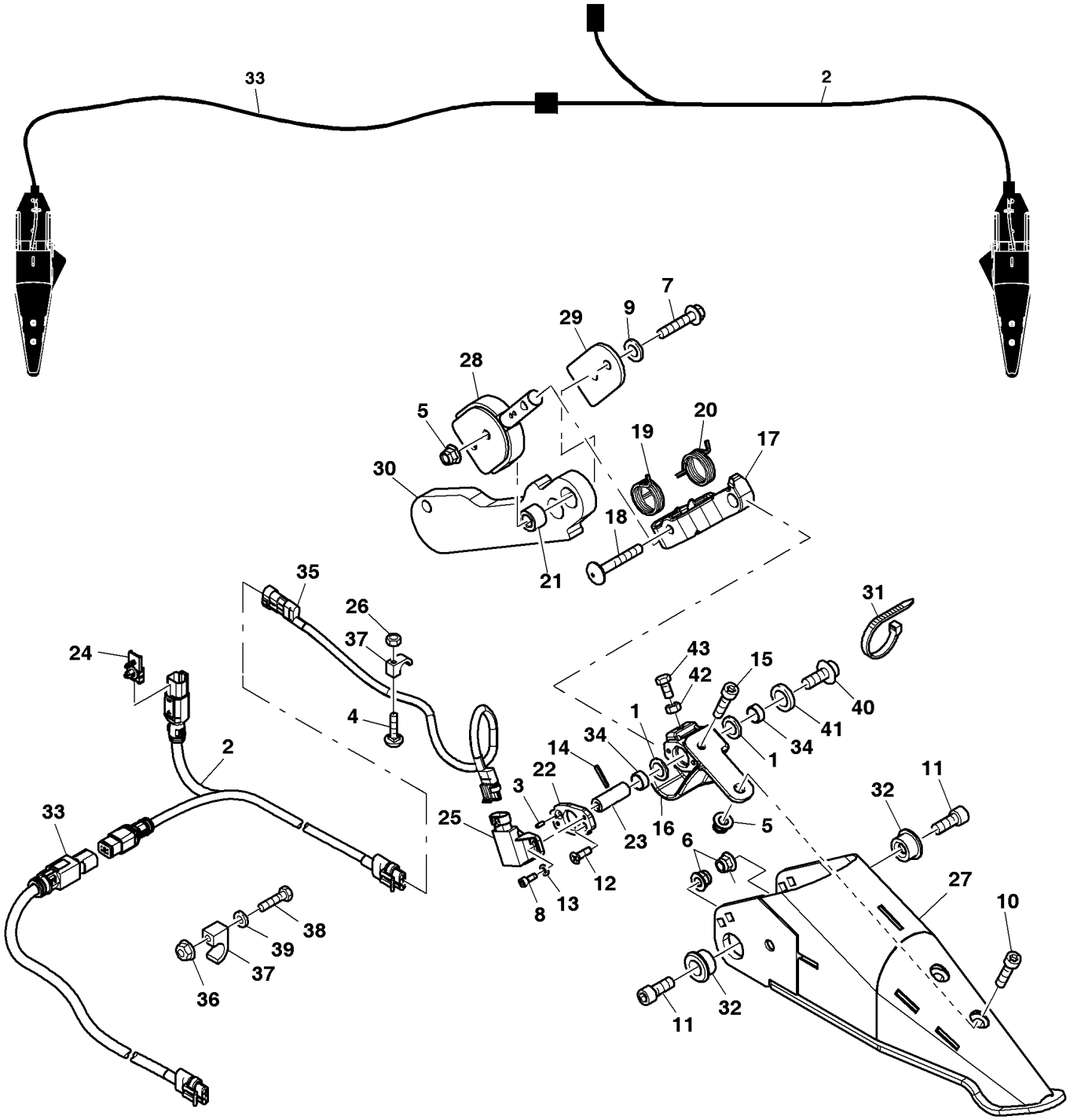
33
2
7
9
29
28
5
20
19
17
30
18
21
35
26
37
24
4
2
33
31
43
42
15
40
41
1
34
1
34
14
22
3
25
23
16
5
6
11
32
12
13
8
27
10
38
39
37
36
32
11

KM002545

Item no.	Article no.	Description	Quantity	remarks
1	LCA129920	SHIM	AR	17x24x0,2
1	24M7383	SHIM	4	17x24x1
2	LCA129165		1	
3	34M7308	SPRING PIN	2	
4	03M7232	BOLT	2	M6x25
5	14M7400	NUT	AR	M10
6	14M7401	Flange Nut	AR	M12
7	19M9585	CAP SCREW	4	M10x45
8	19M9471	BOLT	4	M4x10
9	24M7488	WASHER	4	
10	19M9707	BOLT	2	M10x40
11	19M9713	BOLT	4	M12x30
12	21M7535	SCREW	4	M5x16
13	24M7501	WASHER	AR	
14	34M7098	SPRING PIN	2	
15	19M8821	BOLT	2	M10x25
16	LCA136209	BRACKET	2	
17	HXE78797	BRACKET	2	
18	HXE79214	SCREW	2	
19	HXE79216	SPRING	2	
20	HXE79218	SPRING	2	
21	LCA109006	BUSHING	4	
22	LCA109010	FLANGE	2	
23	LCA117697	SHAFT	2	
24	LCA109012	RETAINER	2	
25	LCA119786	SENSOR	2	
26	14M7622	NUT	2	M6
27	133936	GATHERER POINT	2	
28	LCA122903	RETAINER	2	
29	LCA122901	SHEET	2	
30	LCA119733	SENSOR	2	
31	LCA44646	TIE BAND	4	
32	LCA122009	BUSHING	4	
33	LCA129166		1	
34	HXE10332	BUSHING	4	
35	LCA122904	CABLE	2	

Item no.	Article no.	Description	Quantity	remarks
36	14M7397	NUT	2	M6
37	Z34952	BLOCK CLAMP	2	
38	19M10112	CAP SCREW	2	M6x35
39	24M7506	WASHER	2	
40	LCA121163	SCREW	2	
41	LCA119804	GASKET	2	
42	14M7622	NUT	2	M6
43	19M9677	CAP SCREW	2	M6x25

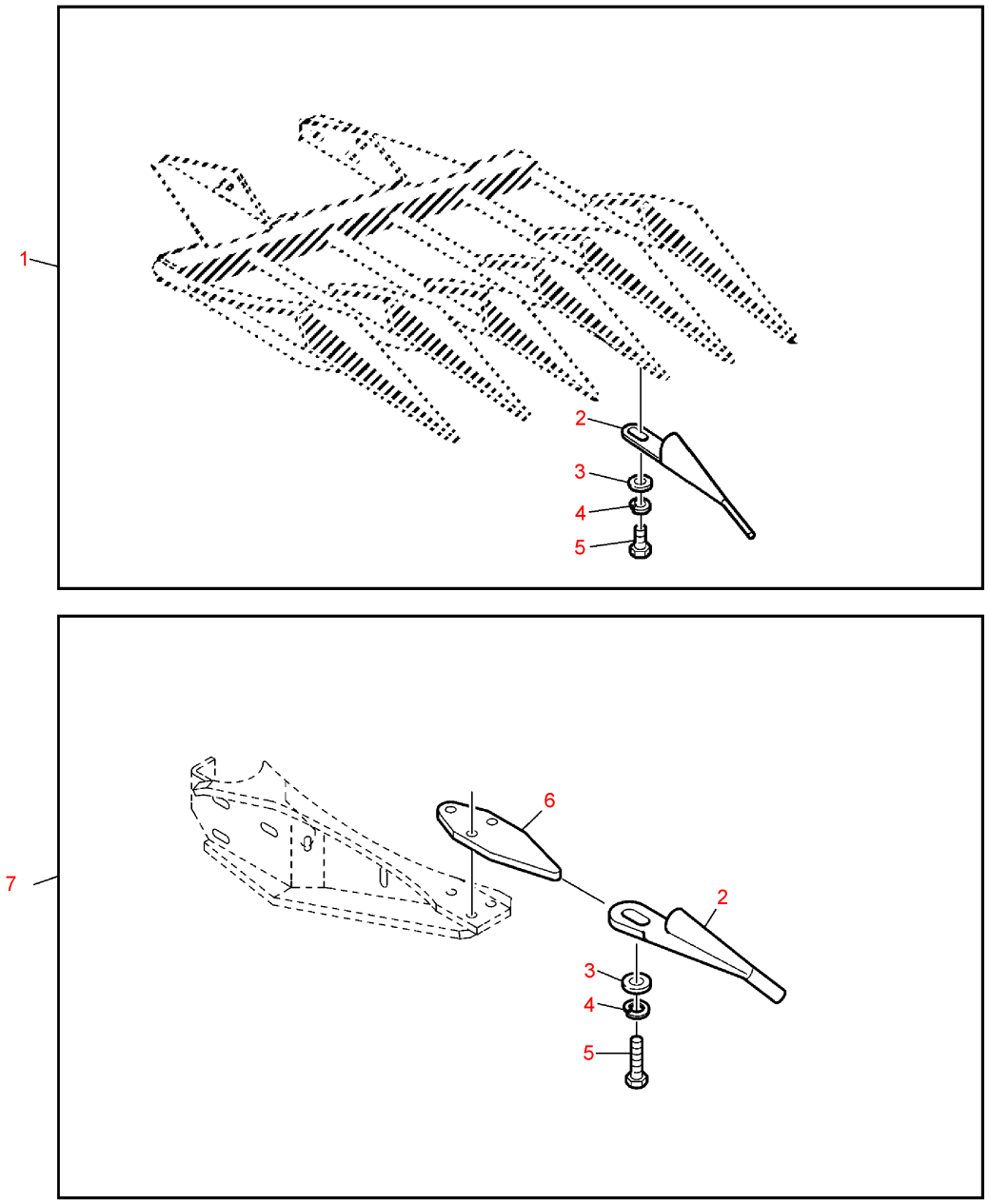

KM001592

Special equipment (KM001592)

Item no.	Article no.	Description	Quantity	remarks
1	LCA79050	KIT	AR	(A)
2	LCA55964	GATHERER POINT	AR	
3	24M7488	WASHER	AR	
4	LCA04218	LOCK WASHER	AR	
5	19M9640	CAP SCREW	AR	M10x30
6	LCA141841	SHEET	2	
7	LCA141842	ADAPTER KIT	1	
		(A) One service kit is for two gatherer drums		

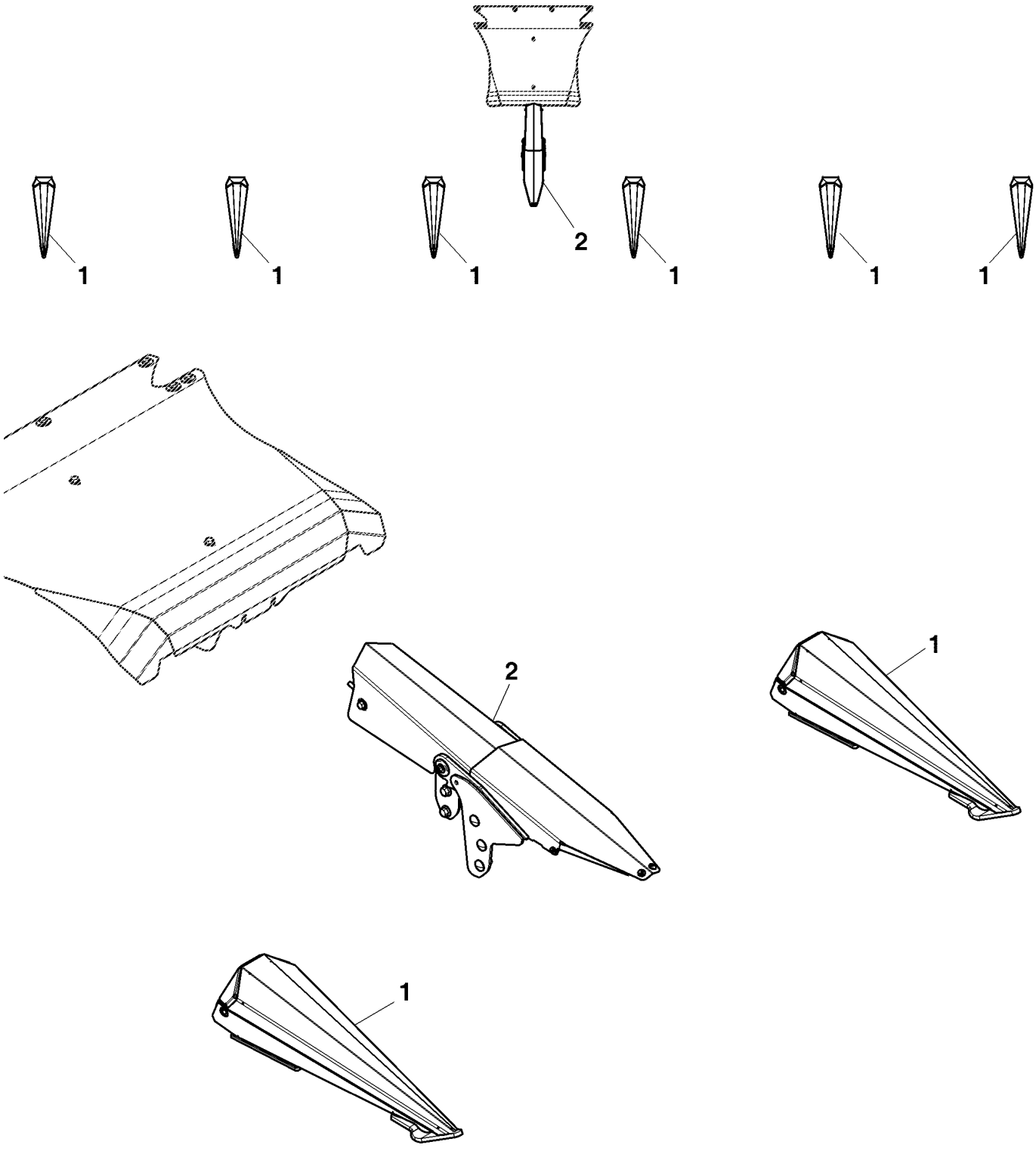

KE000963

Stalk Lifters For Down-Crop - Outer and Middle (KE000963)

Item no.	Article no.	Description	Quantity
1	138113	GATHERER POINT	6
2	136246	SEPERATOR TIPS	1